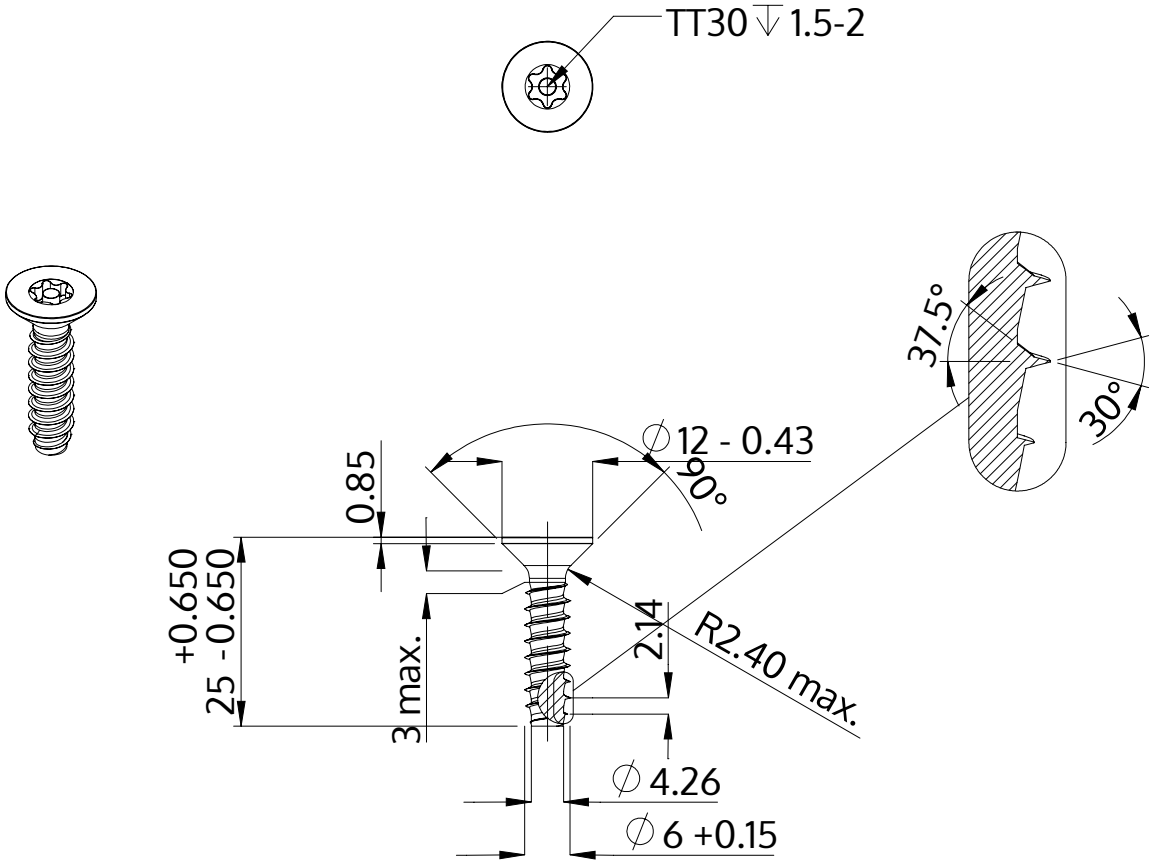

Description	STP43 6.0x25.0 - TT30
Material	steel, hardened
Surface	Zinc-Nickel-plated min. 5µm, passivated black/ Cr-VI-free, baked, sealed
Weight	5.519 kg / 1000 pieces

SCREWERK	**STP430600250B**	
Metric Drawing A4	Scale 1:1	2024-10