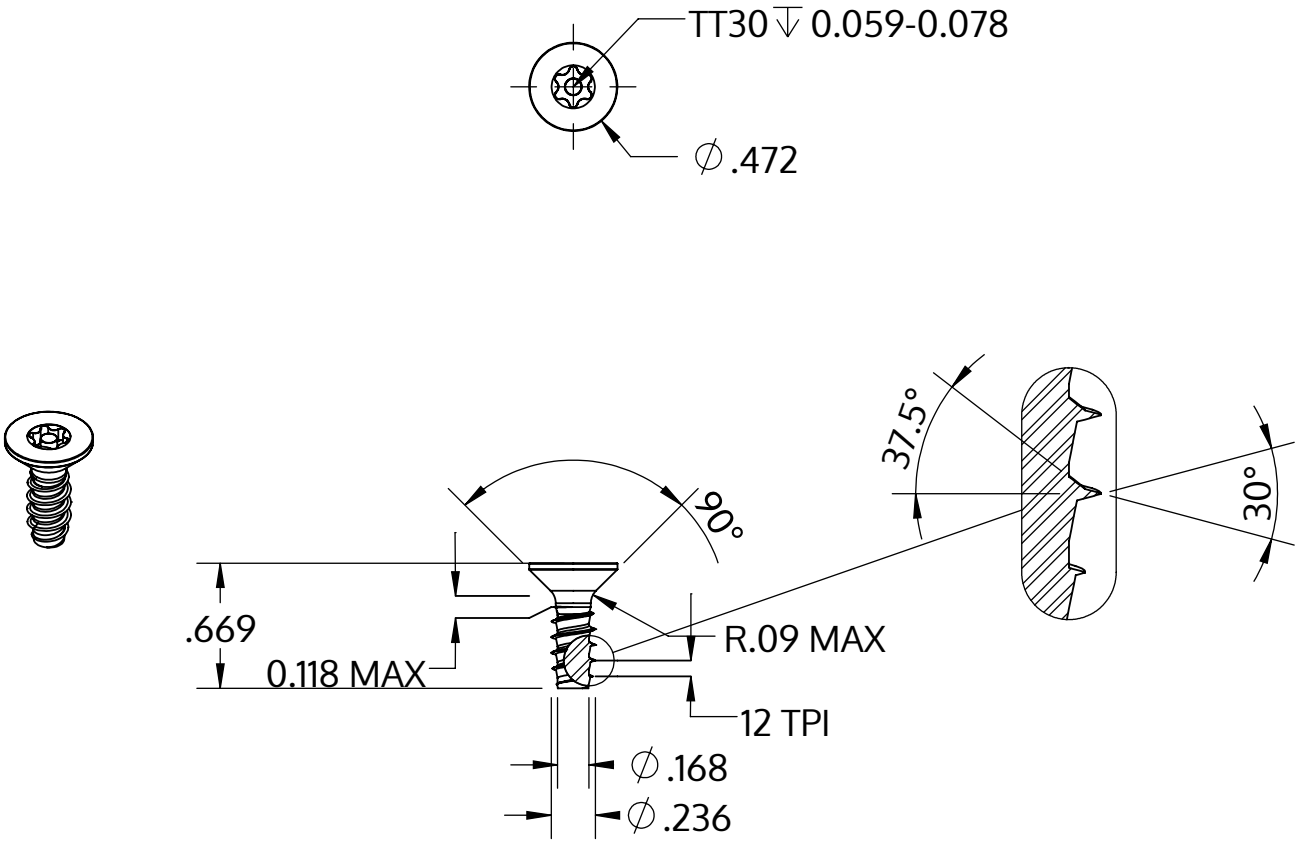

Metric size	M6 x 2.14 mm
US size (converted)	#0.236-12
	Tolerances [inch]
Length	+/- 0.021
Head diameter	+0 / -0.016
Head height	
Thread diameter	+0.005 / -0

Description	STP43 6.0x17.0 - TT30
Material	steel, hardened
Surface	zinc-plated 5-7 µm, baked, blue / transparent passivated
Weight	4.434 kg / 1000 pieces

SCREWERK	**STP430600170S**	
Inch Drawing Size A	Scale 1:1	2024-10