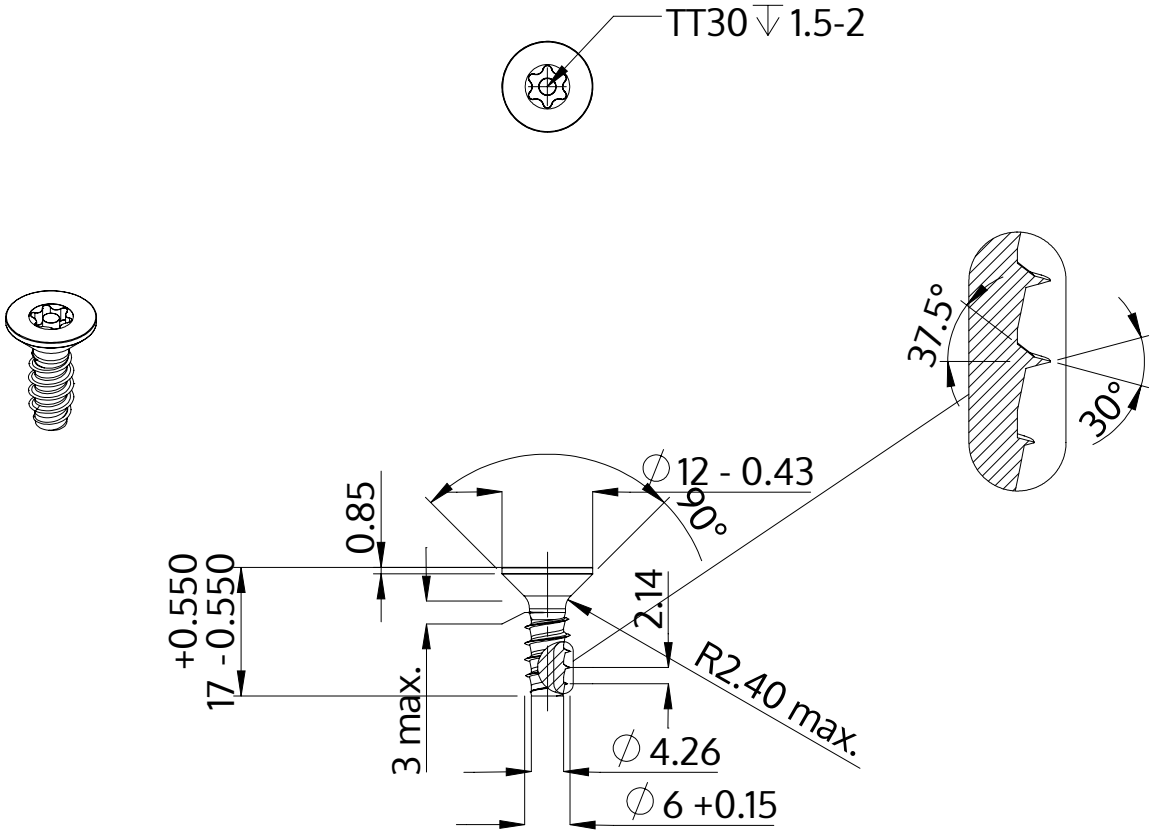

Description	STP43 6.0x17.0 - TT30
Material	steel, hardened
Surface	zinc-plated 5-7 µm, baked, blue / transparent passivated
Weight	4.434 kg / 1000 pieces

SCREWERK	**STP430600170S**	
Metric Drawing A4	Scale 1:1	2024-10