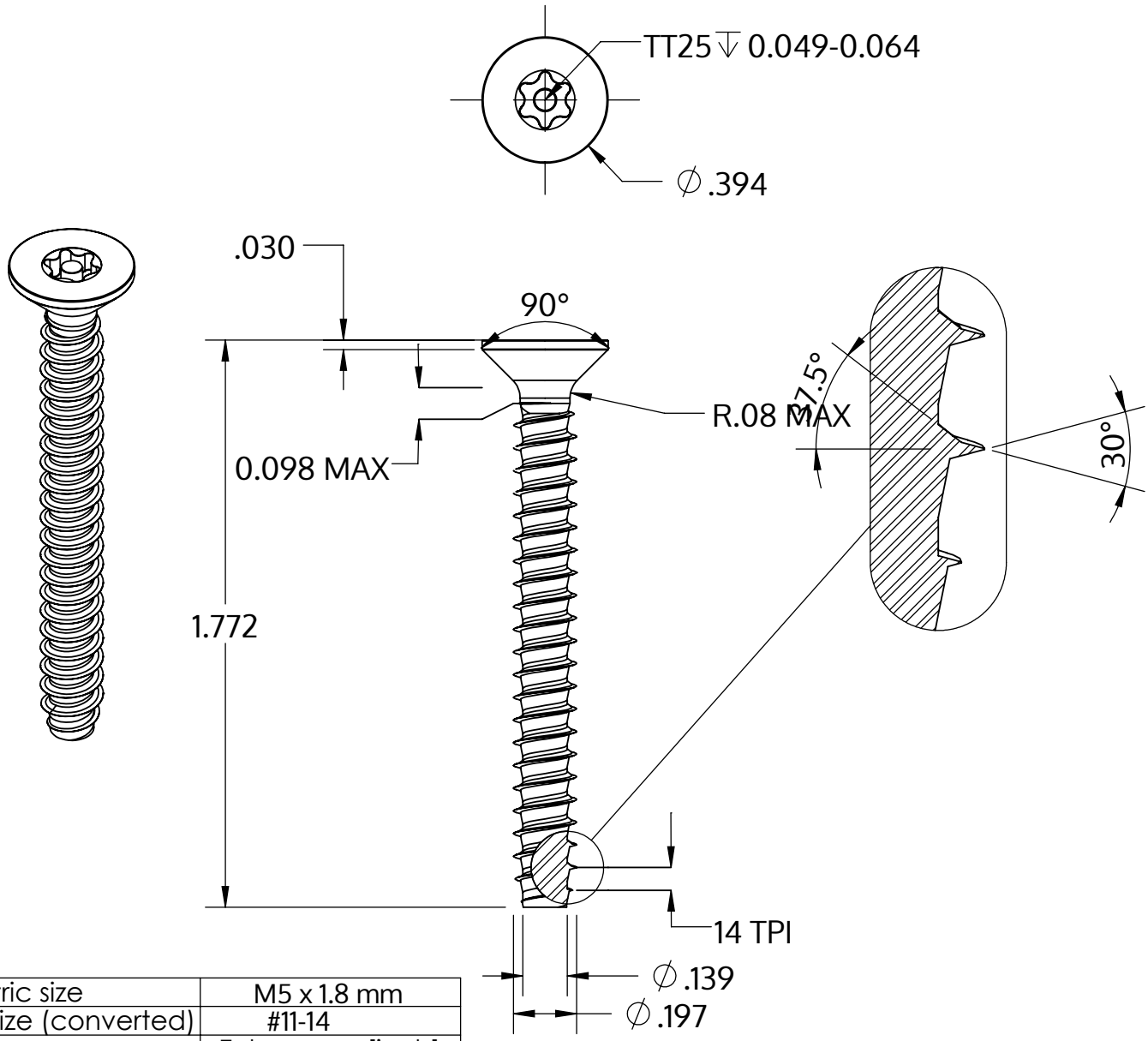


| | |
|---|---|
| Metric size | M5 x 1.8 mm |
| US size (converted) | #11-14 |
| | Tolerances [inch] |
| Length | +/- 0.031 |
| Head diameter | +0 / -0.014 |
| Head height | |
| Thread diameter | +0.005 / -0 |

| | |
|---|---|
| Beskrivelse | STP43 5.0x45.0 - TT25 |
| Materiale | Stål, forædlet |
| Overflade | galvaniseret 5-7 µm, tempret, blå / transparent passiveret |
| Vægt | 4.985 kg / 1000 stykke |

| | | |
|---|---|---|
| SCREWERK | **STP430500450S** | |
| _Zoll Zeichnung Größe A | Skalering 2:1 | 2024-10 |