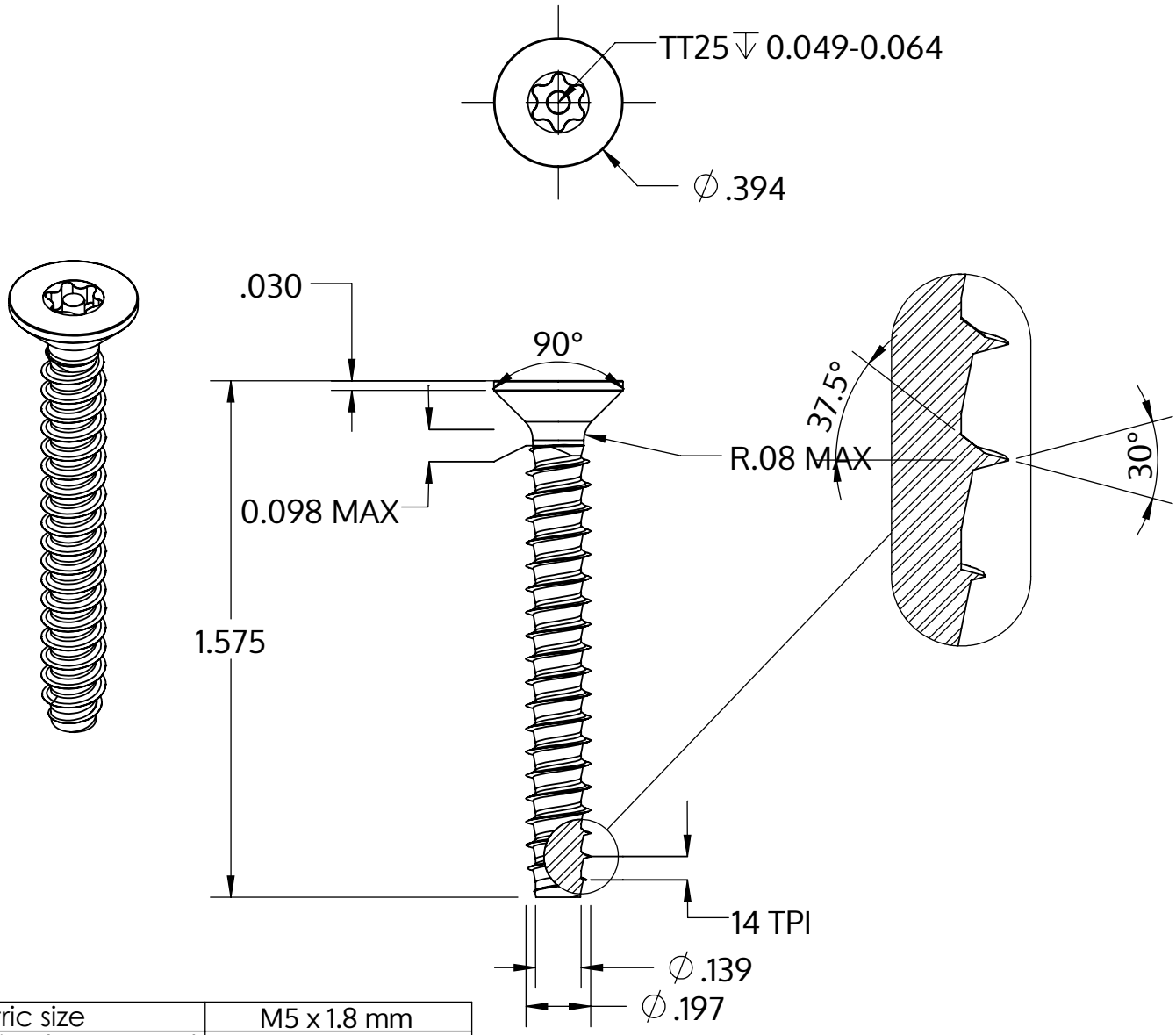

Metric size	M5 x 1.8 mm
US size (converted)	#11-14
	Tolerances [inch]
Length	+/- 0.031
Head diameter	+0 / -0.014
Head height	
Thread diameter	+0.005 / -0

Descriere	STP43 5.0x40.0 - TT25
Material	oțel, călit
Exterior	zincat 5-7 µm, recopt, pasivat transparent/albastru
Greutate	4.516 kg / 1000 unități

SCREWERK	**STP430500400S**	
_Zoll Zeichnung Größe A	Scalarea 2:1	2024-10