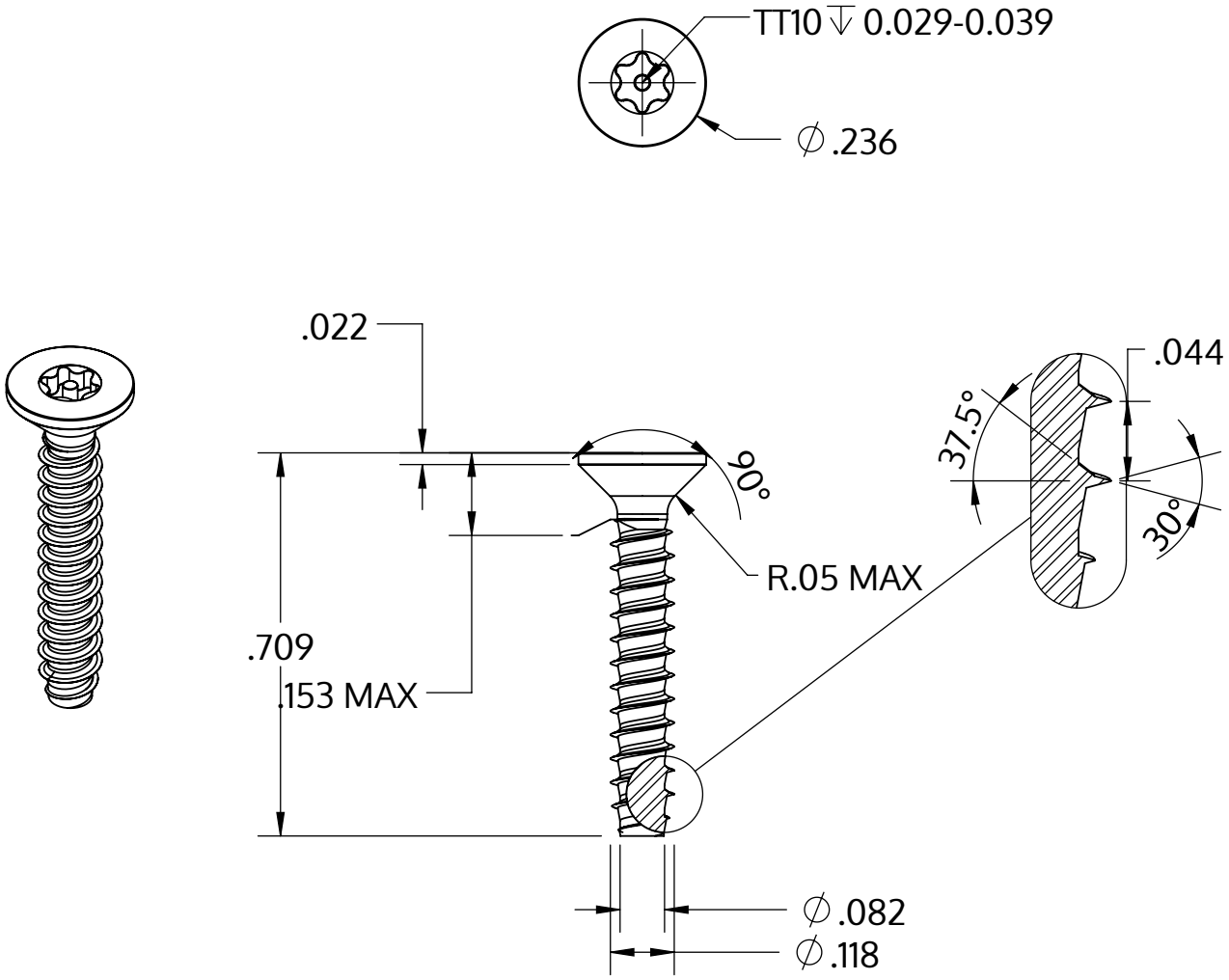


| | |
|---|---|
| Metric size | M3 x 1.12 mm |
| US size (converted) | #4-22 |
| | Tolerances [inch] |
| Length | +/- 0.021 |
| Head diameter | +0 / -0.011 |
| Head height | +/- 0.005 |
| Thread diameter | +0.003 / -0 |

| | |
|---|---|
| Beskrivning | STP43 3.0x18.0 - TT10 |
| Material | rostfritt stål A2 |
| Yta | blank och passiviserad |
| Vikt | 0.811 kg / 1000 styck |

| | | |
|---|---|---|
| SCREWERK | **STP430300180E** | |
| _Zoll Zeichnung Größe A | Skala 3:1 | 2024-10 |