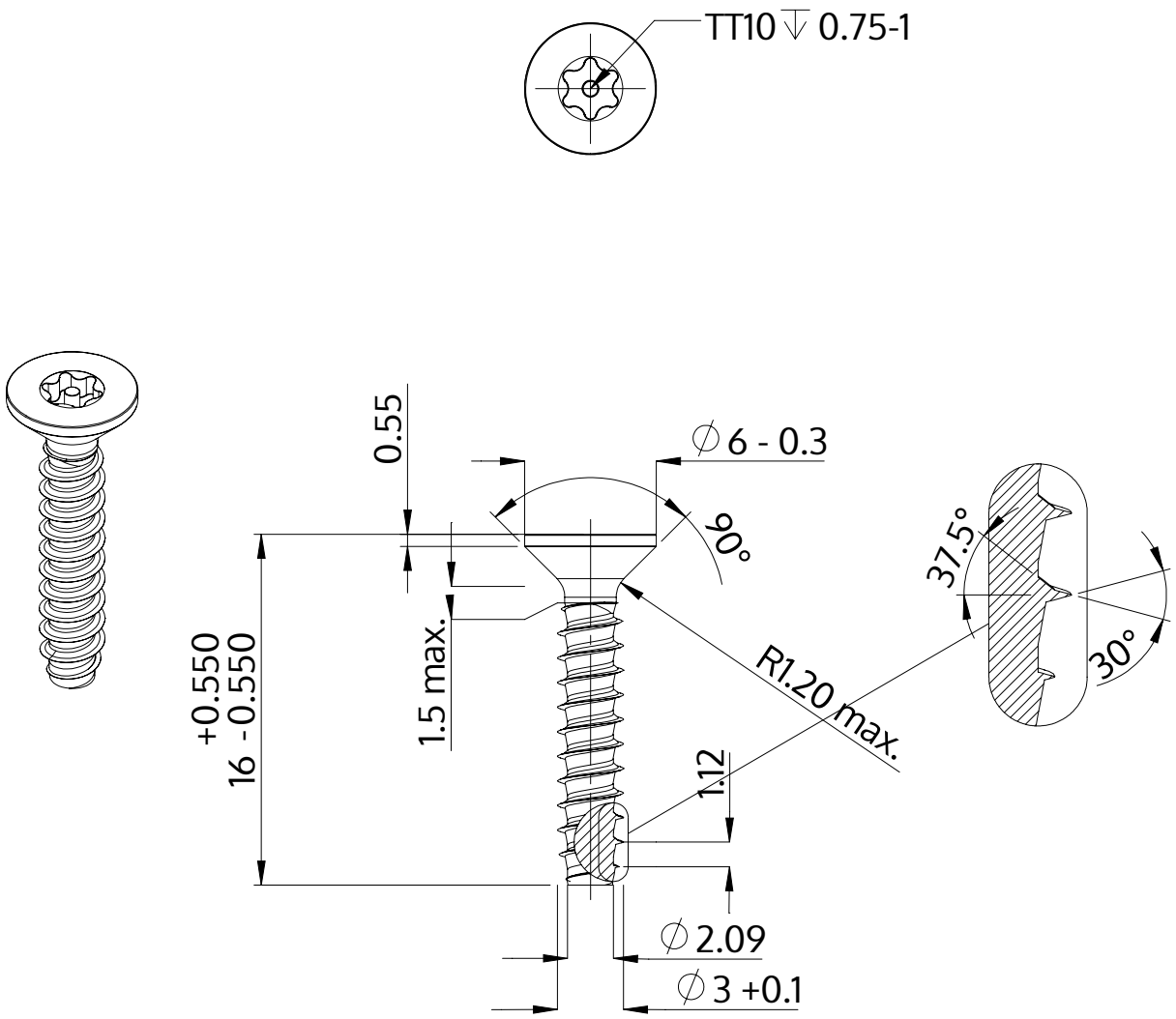

Description	STP43 3.0x16.0 - TT10
Material	stainless-steel A2
Surface	bright, pickled and passivated
Weight	0.744 kg / 1000 pieces

SCREWERK	**STP430300160E**	
Metric Drawing A4	Scale 3:1	2024-10