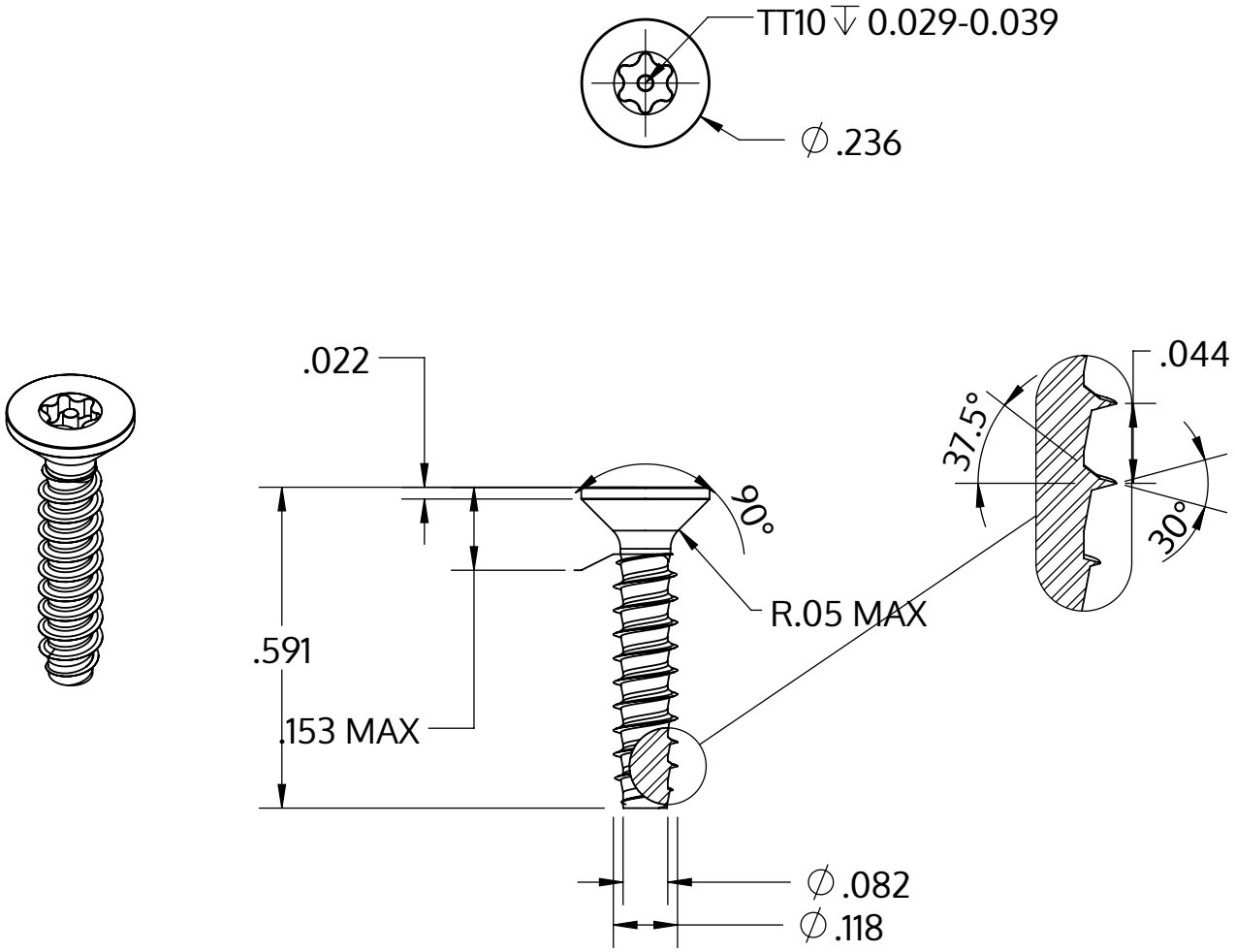


| | |
|---|---|
| Metric size | M3 x 1.12 mm |
| US size (converted) | #4-22 |
| | Tolerances [inch] |
| Length | +/- 0.021 |
| Head diameter | +0 / -0.011 |
| Head height | +/- 0.005 |
| Thread diameter | +0.003 / -0 |

| | |
|---|---|
| Descrizione | STP43 3.0x15.0 - TT10 |
| Materiale | acciaio inossidabile A2 |
| Superficie | bianco-decapato e passivato |
| Peso | 0.710 kg / 1000 pezzi |

| | | |
|---|---|---|
| SCREWERK | **STP430300150E** | |
| _Zoll Zeichnung Größe A | Scala 3:1 | 2024-10 |