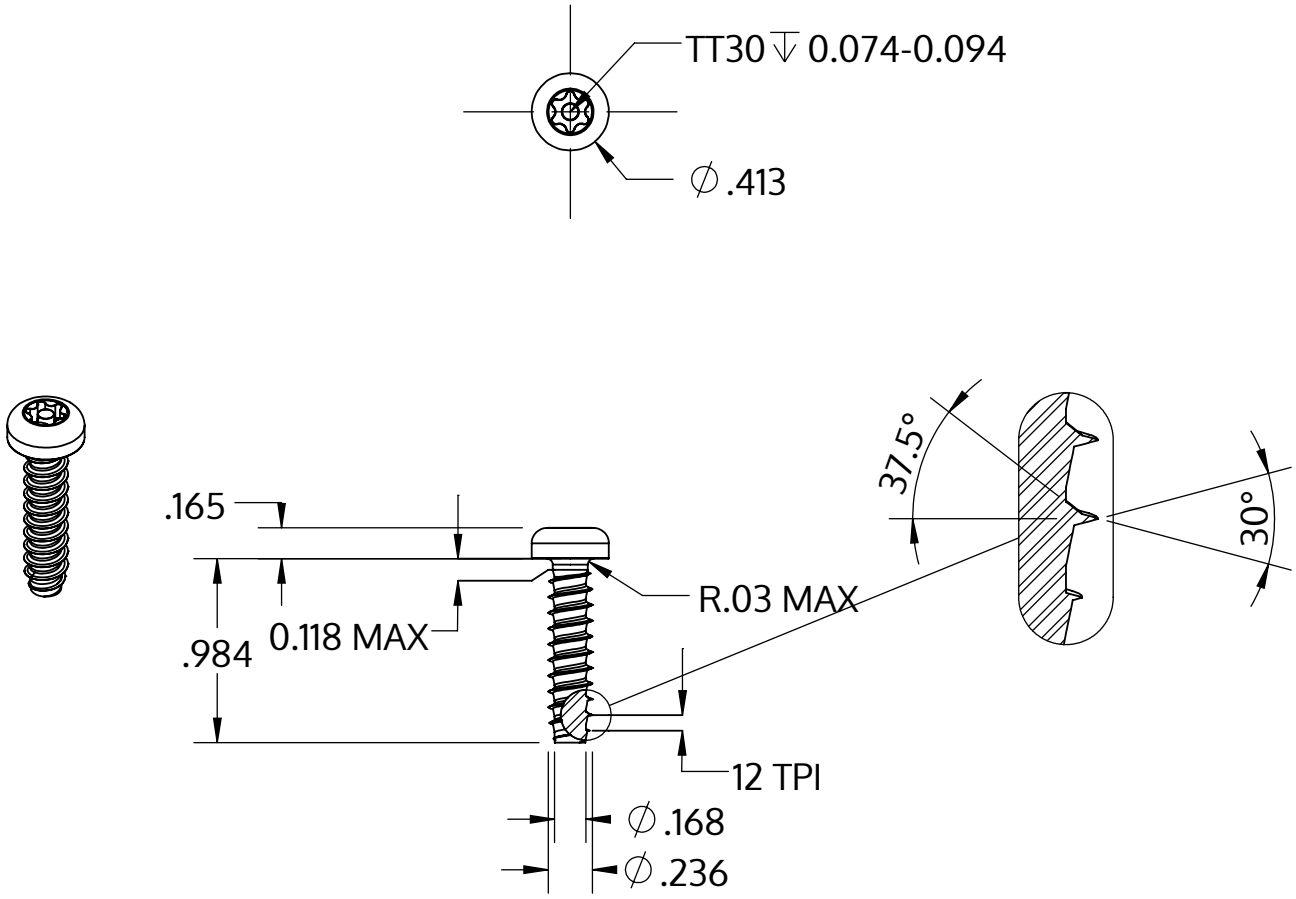

Metric size	M6 x 2.14 mm
US size (converted)	#0.236-12
	Tolerances [inch]
Length	+/- 0.025
Head diameter	+0 / -0.016
Head height	+/- 0.005
Thread diameter	+0.005 / -0

Descrizione	STP42 6.0x25.0 - TT30
Materiale	acciaio inossidabile A2
Superficie	bianco-decapato e passivato
Peso	5.569 kg / 1000 pezzi

SCREWERK	**STP420600250E**	
_Zoll Zeichnung Größe A	Scala 1:1	2024-10