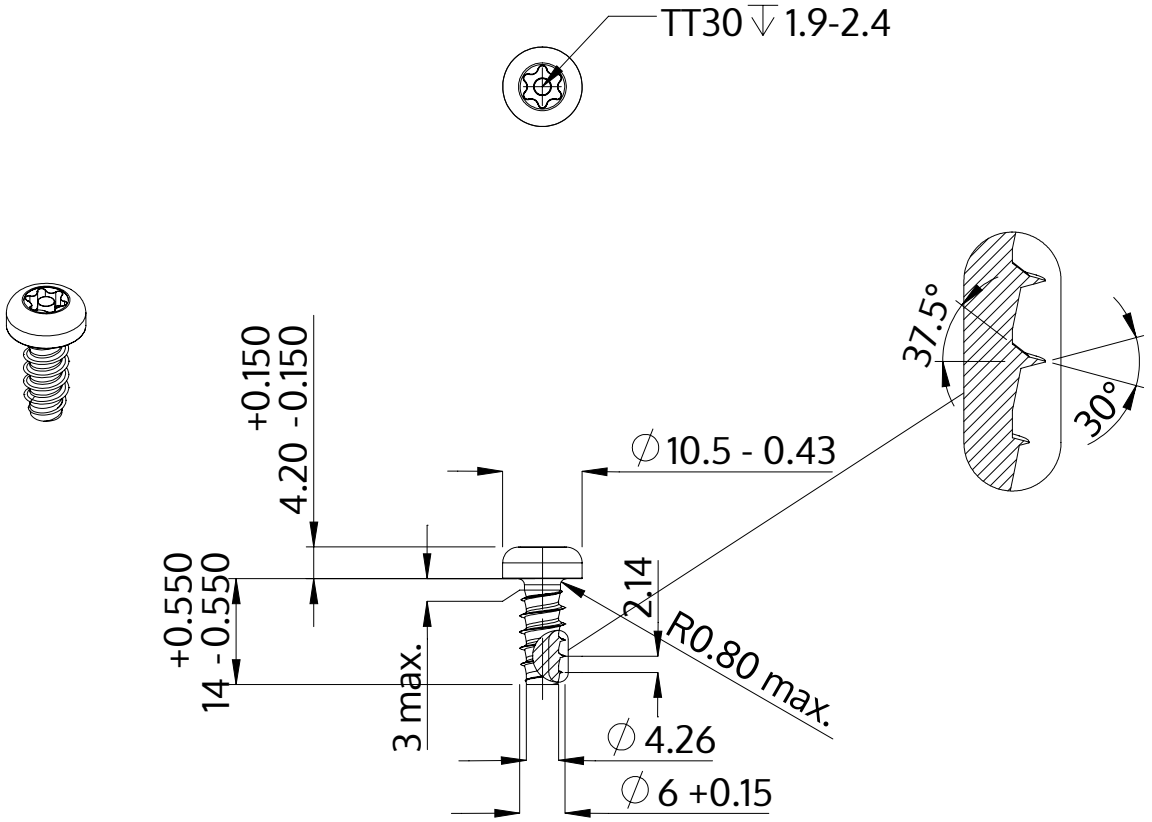

Description	STP42 6.0x14.0 - TT30
Material	steel, hardened
Surface	zinc-plated 5-7 µm, baked, blue / transparent passivated
Weight	4.077 kg / 1000 pieces

SCREWERK	**STP420600140S**	
Metric Drawing A4	Scale 1:1	2024-10