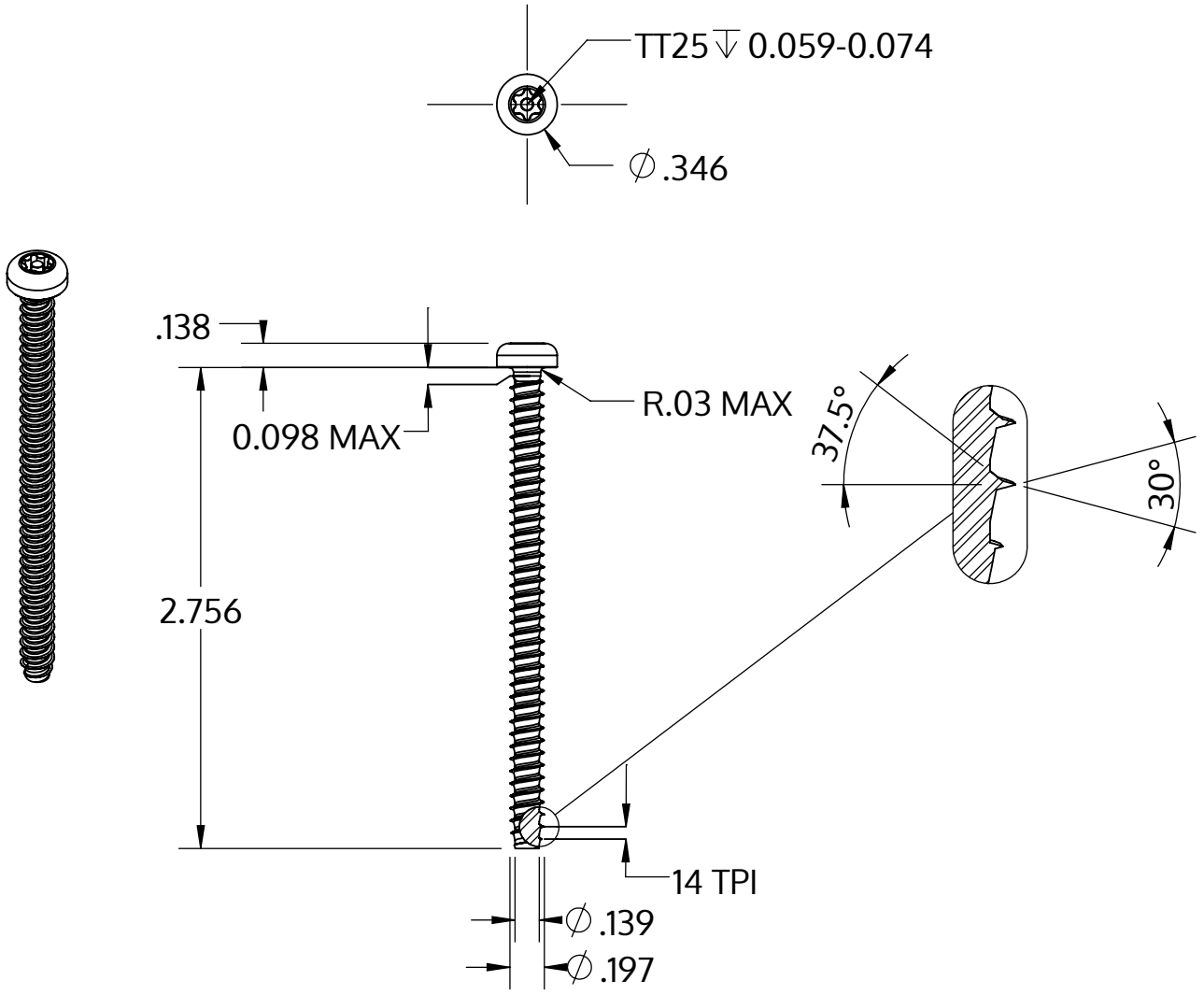


| | |
|---|---|
| Metric size | M5 x 1.8 mm |
| US size (converted) | #11-14 |
| | Tolerances [inch] |
| Length | +/- 0.037 |
| Head diameter | +0 / -0.014 |
| Head height | +/- 0.005 |
| Thread diameter | +0.005 / -0 |

| | |
|---|---|
| Descrizione | STP42 5.0x70.0 - TT25 |
| Materiale | acciaio, temprato |
| Superficie | zincato 5-7 micron, ricotto, blu / trasparente passivato |
| Peso | 7.919 kg / 1000 pezzi |

| | | |
|---|---|---|
| SCREWERK | **STP420500700S** | |
| _Zoll Zeichnung Größe A | Scala 2:1 | 2024-10 |