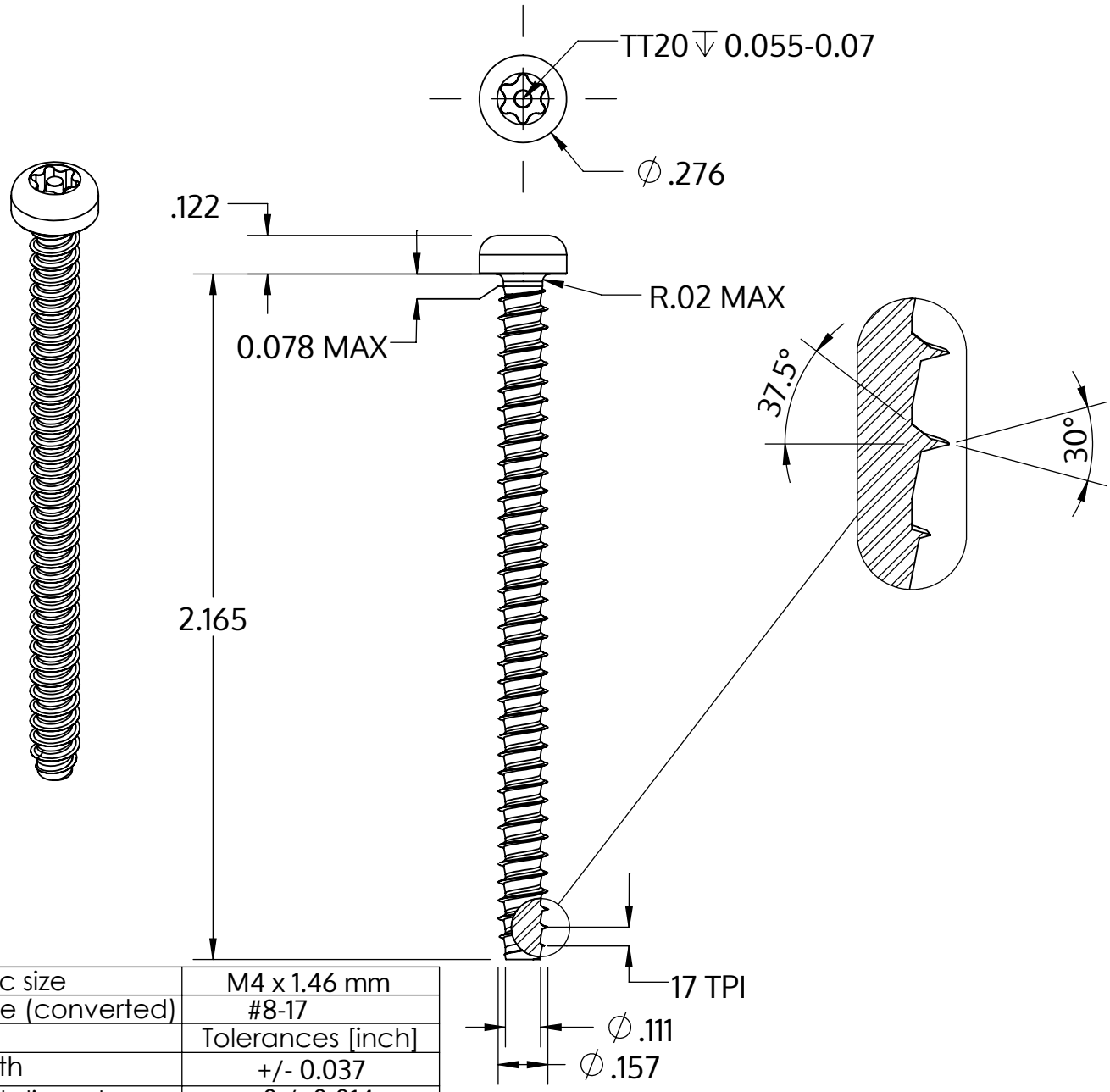

Metric size	M4 x 1.46 mm
US size (converted)	#8-17
	Tolerances [inch]
Length	+/- 0.037
Head diameter	+0 / -0.014
Head height	+/- 0.005
Thread diameter	+0.003 / -0

Description	STP42 4.0x55.0 - TT20
Material	steel, hardened
Surface	zinc-plated 5-7 µm, baked, blue / transparent passivated
Weight	4.081 kg / 1000 pieces

SCREWERK	**STP420400550S**	
Inch Drawing Size A	Scale 2:1	2024-10