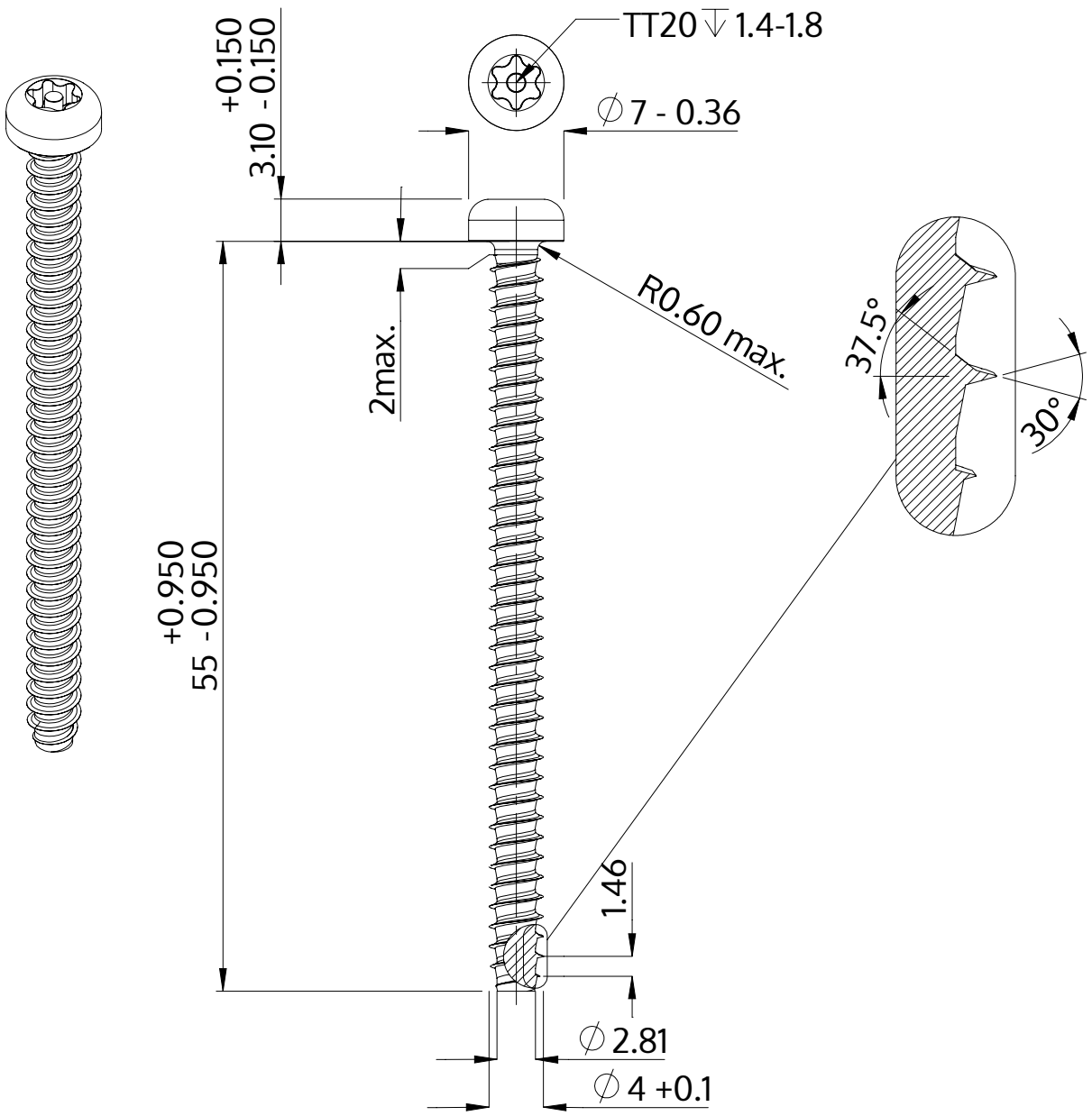

Description	STP42 4.0x55.0 - TT20
Material	steel, hardened
Surface	zinc-plated 5-7 µm, baked, blue / transparent passivated
Weight	4.081 kg / 1000 pieces

SCREWERK	**STP420400550S**	
Metric Drawing A4	Scale 2:1	2024-10