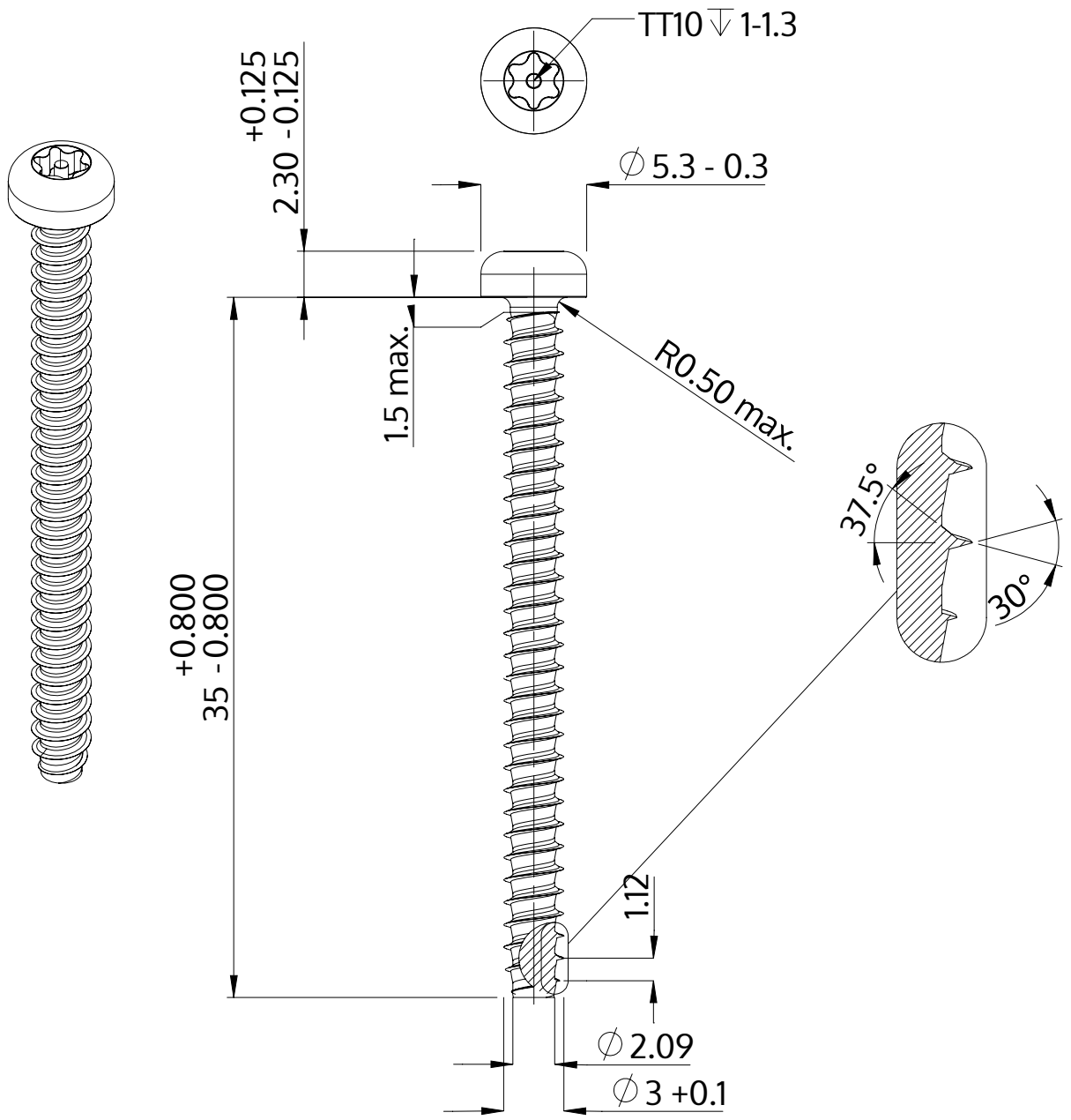

Description	STP42 3.0x35.0 - TT10
Material	steel, hardened
Surface	zinc-plated 5-7 µm, baked, blue / transparent passivated
Weight	1.454 kg / 1000 pieces

SCREWERK	**STP420300350S**	
Metric Drawing A4	Scale 3:1	2024-10