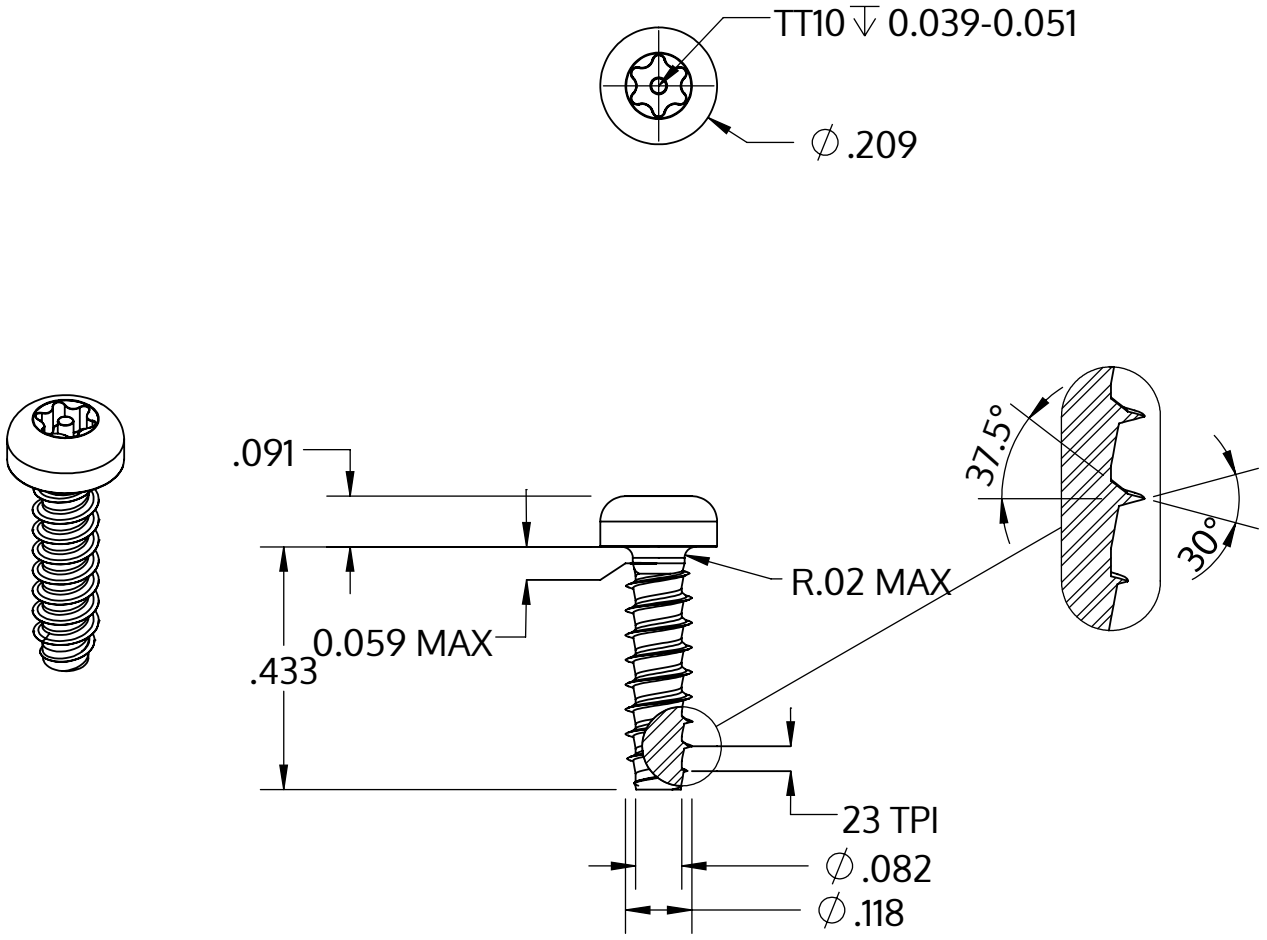

Metric size	M3 x 1.12 mm
US size (converted)	#4-23
	Tolerances [inch]
Length	+/- 0.021
Head diameter	+0 / -0.011
Head height	+/- 0.004
Thread diameter	+0.003 / -0

Descriere	STP42 3.0x11.0 - TT10
Material	oțel, călit
Exterior	zincat 5-7 µm, recopt, pasivat transparent/albastru
Greutate	0.659 kg / 1000 unități

SCREWERK	**STP420300110S**	
_Zoll Zeichnung Größe A	Scalarea 3:1	2024-10