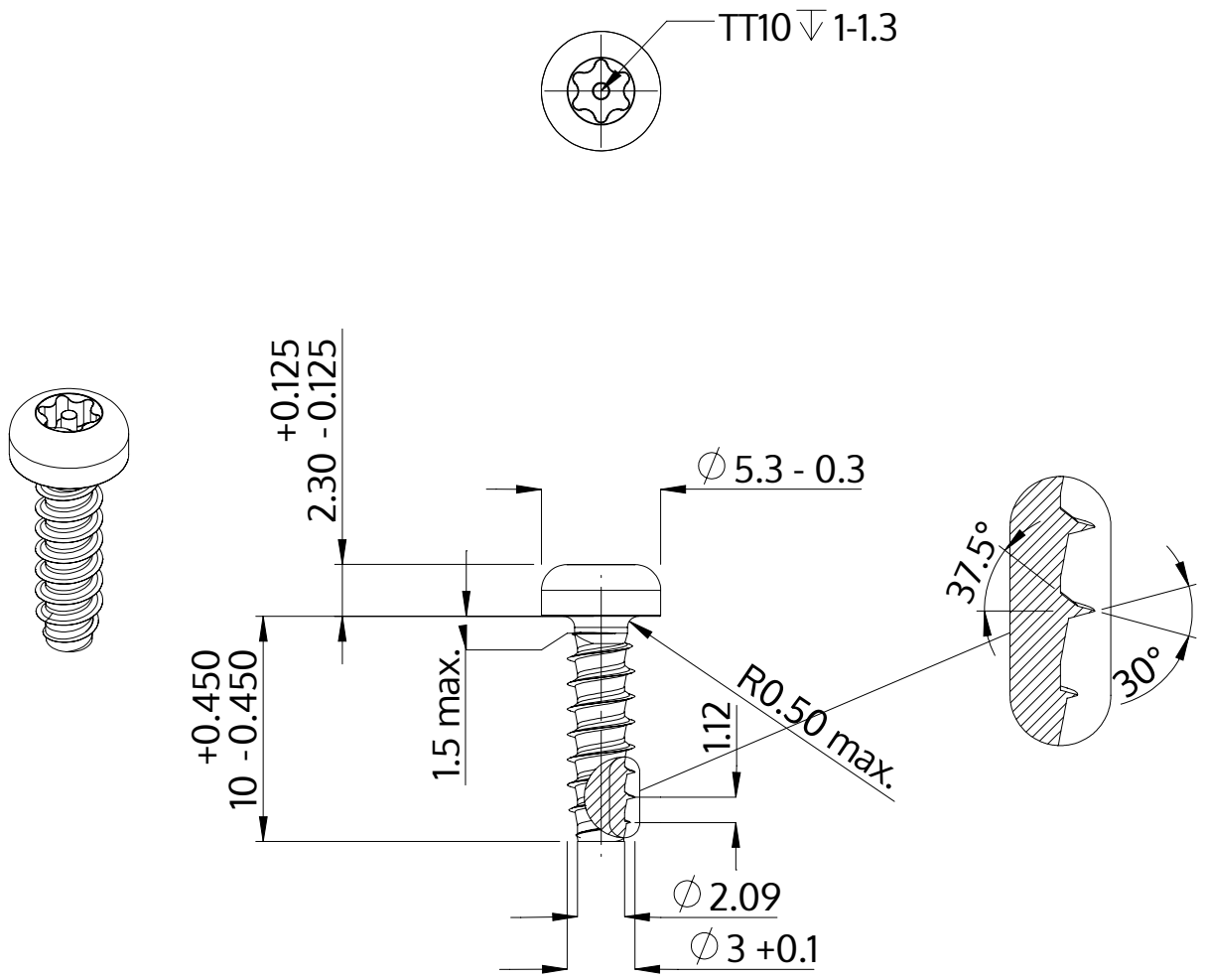

Description	STP42 3.0x10.0 - TT10
Material	steel, hardened
Surface	zinc-plated 5-7 µm, baked, blue / transparent passivated
Weight	0.626 kg / 1000 pieces

SCREWERK	**STP420300100S**	
Metric Drawing A4	Scale 3:1	2024-10