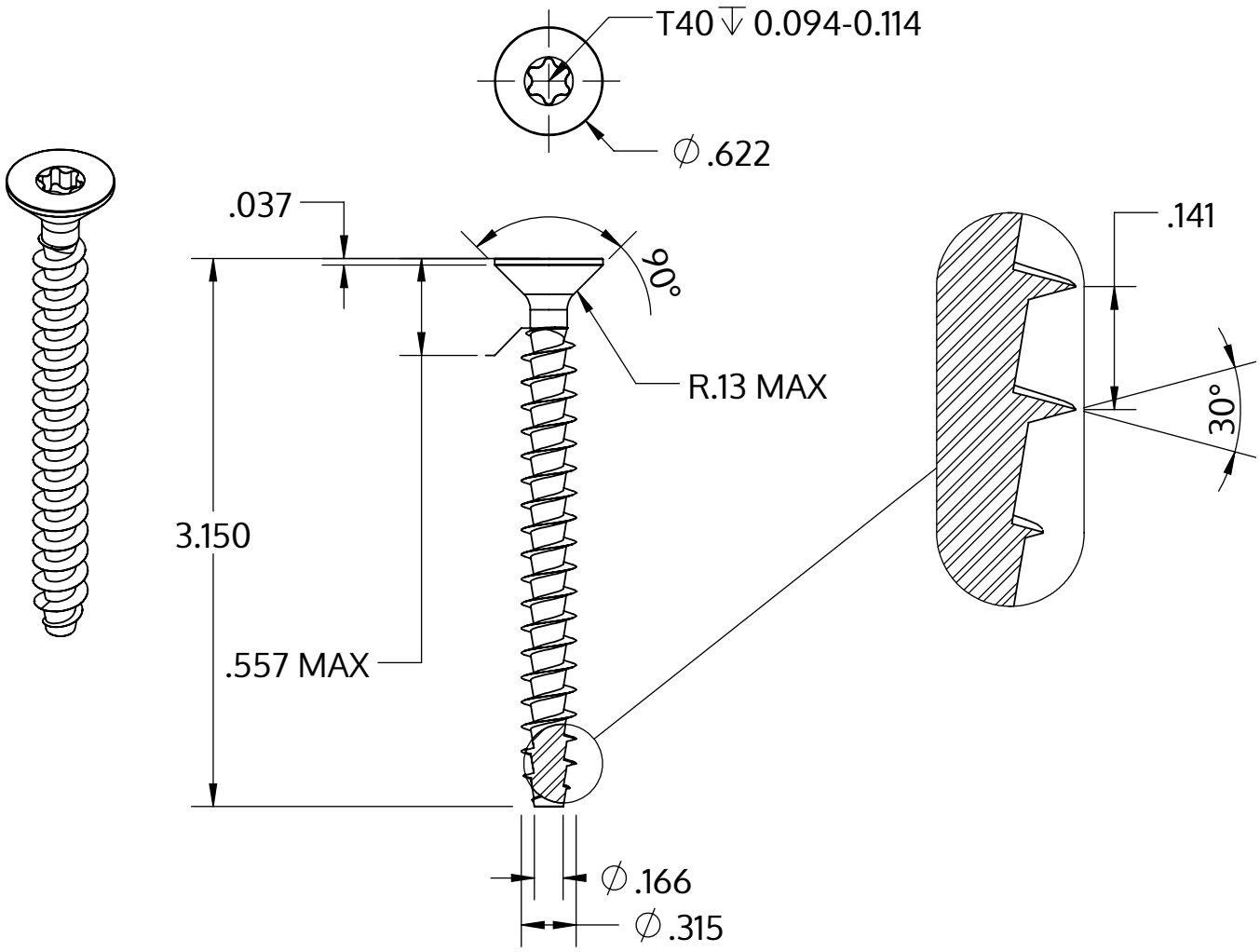


| | |
|---|---|
| Metric size | M8 x 3.59 mm |
| US size (converted) | #0.314-7 |
| | Tolerances [inch] |
| Length | +/- 0.037 |
| Head diameter | +0 / -0.016 |
| Head height | +/- 0.004 |
| Thread diameter | +0.008 / -0 |

| | |
|---|---|
| Descrizione | STP41A 8.0x80.0 - T40 |
| Materiale | acciaio, temprato |
| Superficie | zincato 5-7 micron, ricotto, blu / trasparente passivato |
| Peso | 17.660 kg / 1000 pezzi |

| | | |
|---|---|---|
| SCREWERK | **STP41A0800800S** | |
| _Zoll Zeichnung Größe A | Scala 1:1 | 2024-10 |