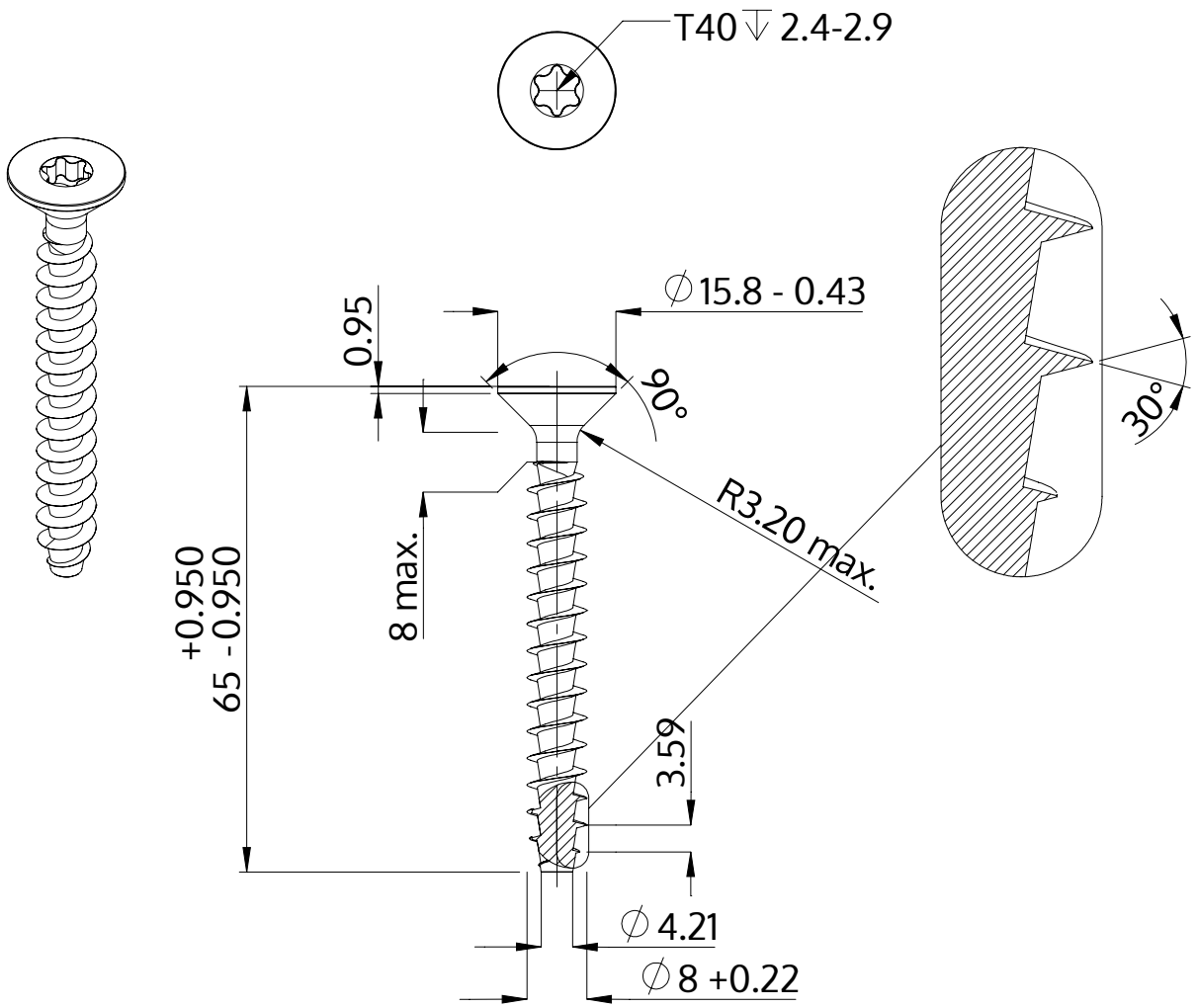

Description	STP41A 8.0x65.0 - T40
Material	steel, hardened
Surface	zinc-plated 5-7 µm, baked, blue / transparent passivated
Weight	14.936 kg / 1000 pieces

SCREWERK	**STP41A0800650S**	
Metric Drawing A4	Scale 1:1	2024-10