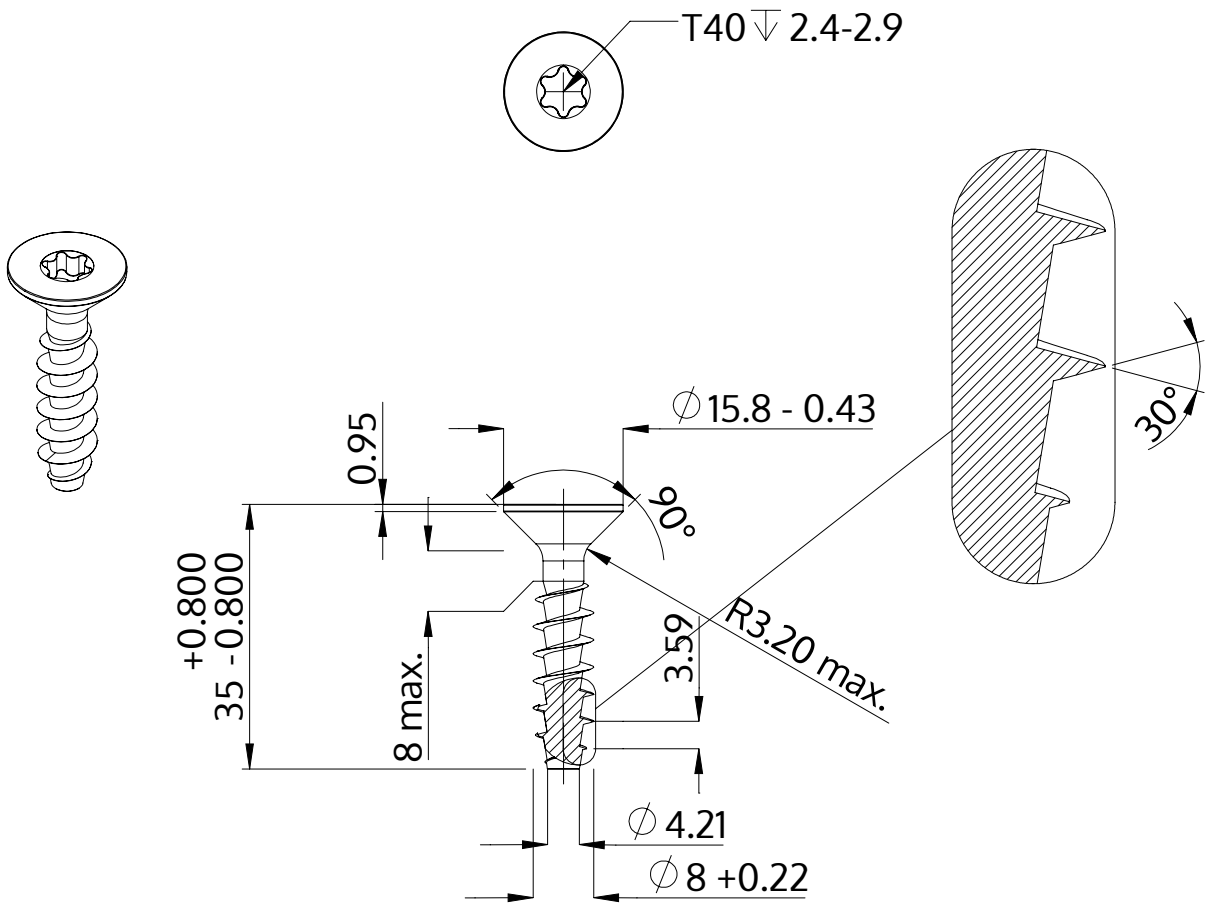

Description	STP41A 8.0x35.0 - T40
Material	stainless-steel A2
Surface	bright, pickled and passivated
Weight	9.489 kg / 1000 pieces

SCREWERK	**STP41A0800350E**	
Metric Drawing A4	Scale 1:1	2024-05