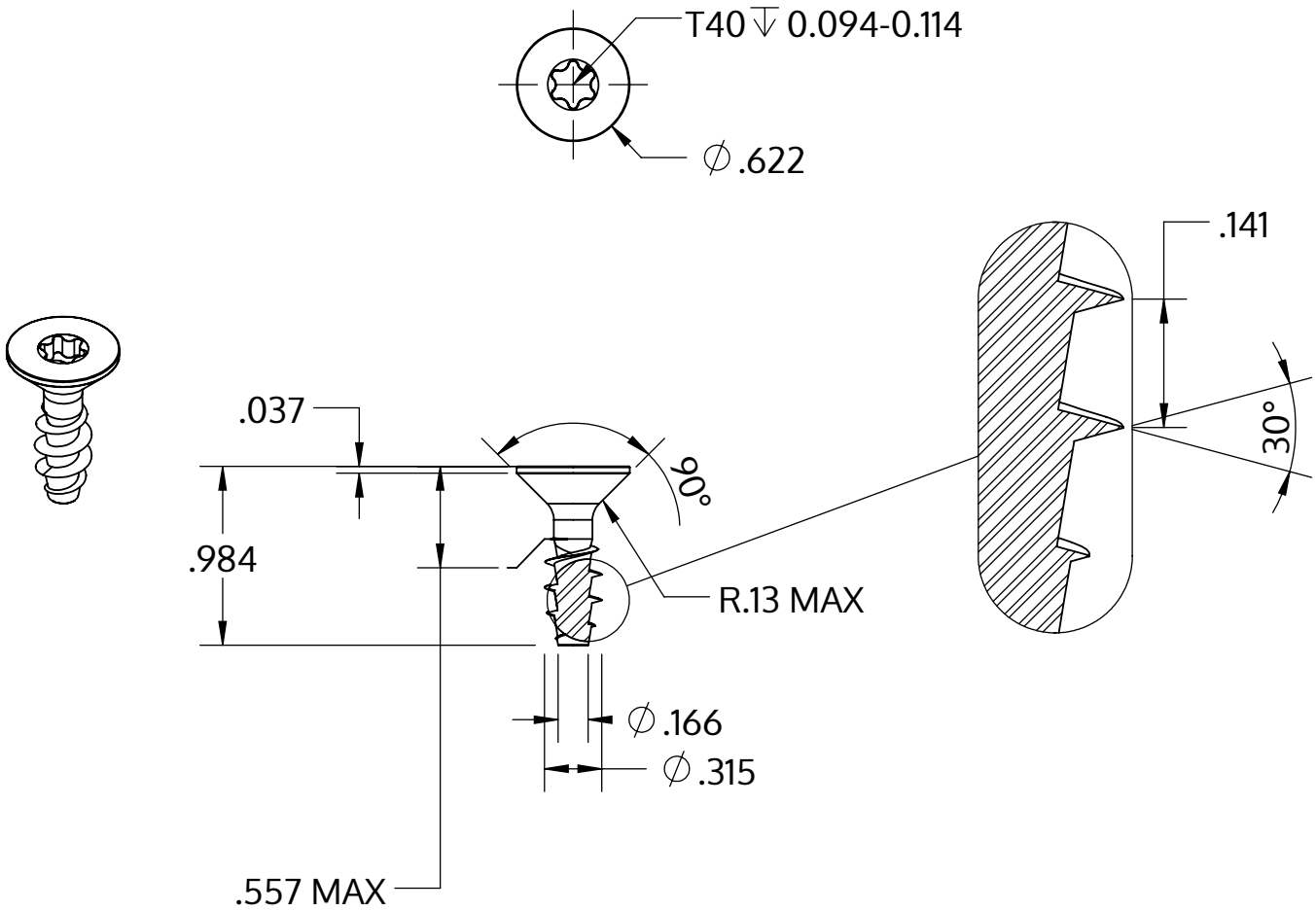

Metric size	M8 x 3.59 mm
US size (converted)	#0.314-7
	Tolerances [inch]
Length	+/- 0.025
Head diameter	+0 / -0.016
Head height	+/- 0.004
Thread diameter	+0.008 / -0

Descriere	STP41A 8.0x25.0 - T40
Material	oțel, călit
Exterior	zincat 5-7 µm, recopt, pasivat transparent/albastru
Greutate	7.673 kg / 1000 unități

SCREWERK	**STP41A0800250S**	
_Zoll Zeichnung Größe A	Scalarea 1:1	2024-10