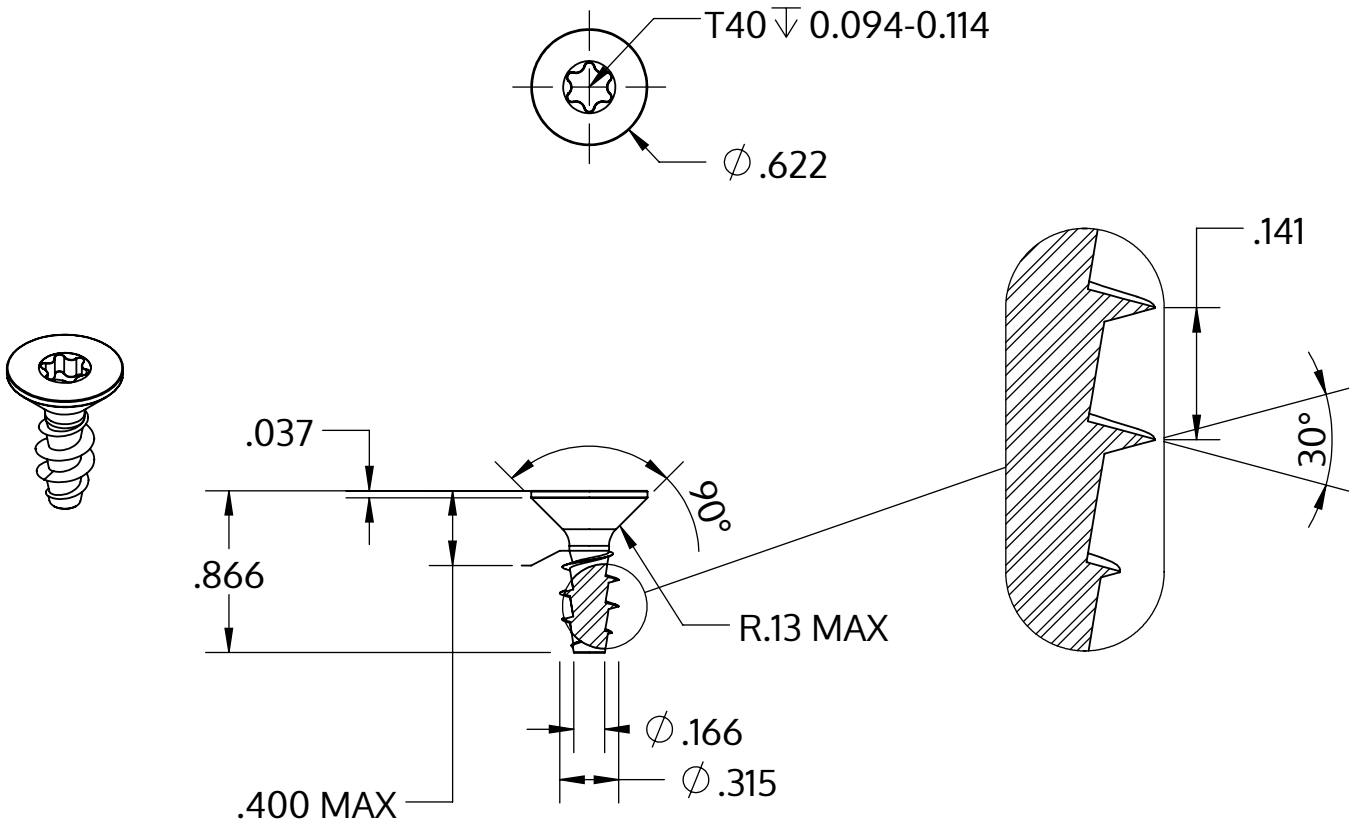

Metric size	M8 x 3.59 mm
US size (converted)	#0.314-7
	Tolerances [inch]
Length	+/- 0.025
Head diameter	+0 / -0.016
Head height	+/- 0.004
Thread diameter	+0.008 / -0

Description	STP41A 8.0x22.0 - T40
Material	stainless-steel A2
Surface	bright, pickled and passivated
Weight	7.128 kg / 1000 pieces

SCREWERK	**STP41A0800220E**	
Inch Drawing Size A	Scale 1:1	2024-10