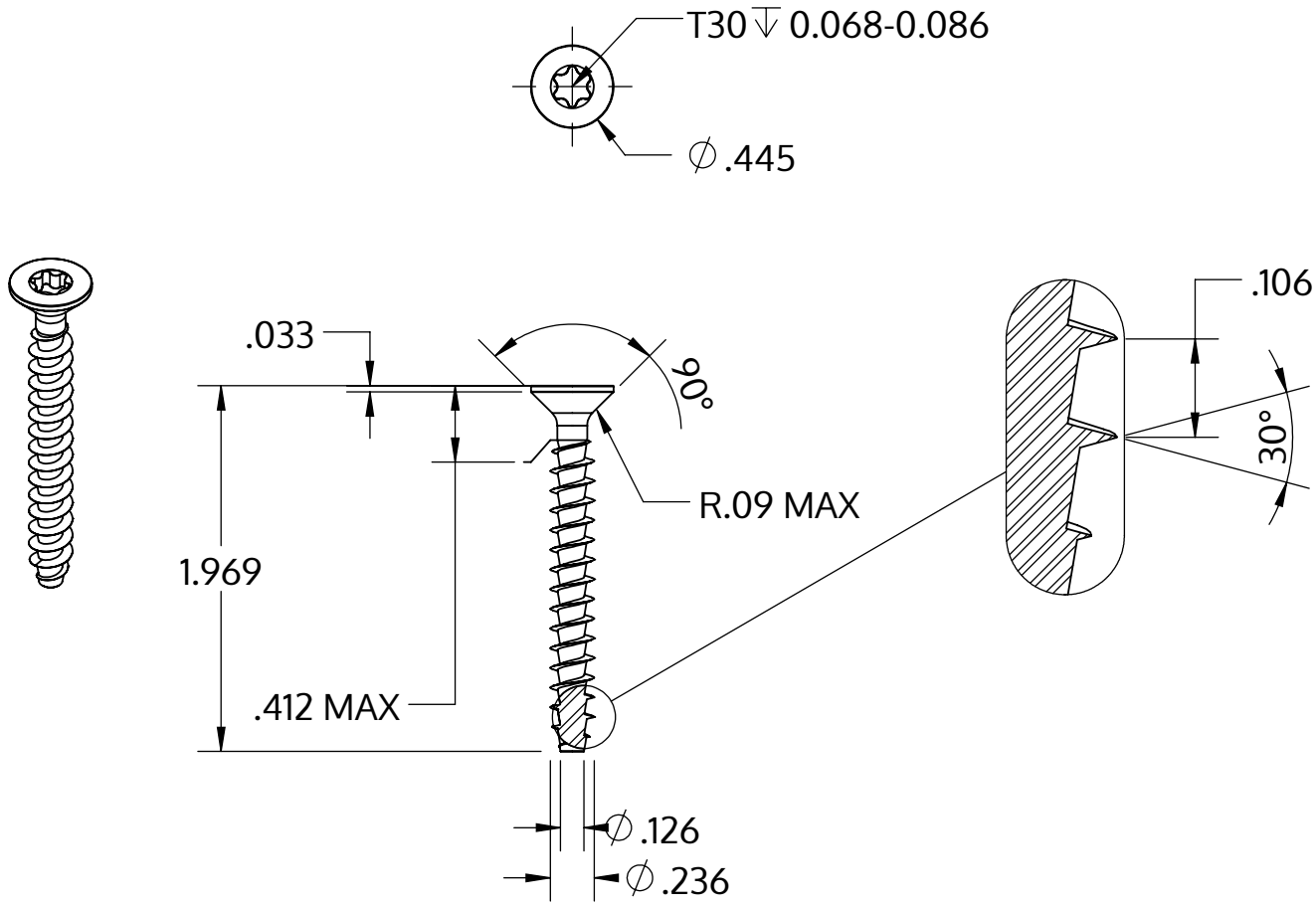


| | |
|---|---|
| Metric size | M6 x 2.69 mm |
| US size (converted) | #0.236-9 |
| | Tolerances [inch] |
| Length | +/- 0.031 |
| Head diameter | +0 / -0.016 |
| Head height | +/- 0.004 |
| Thread diameter | +0.007 / -0 |

| | |
|---|---|
| Description | STP41A 6.0x50.0 - T30 |
| Material | stainless-steel A2 |
| Surface | bright, pickled and passivated |
| Weight | 5.973 kg / 1000 pieces |

| | | |
|---|---|---|
| SCREWERK | **STP41A0600500E** | |
| Inch Drawing Size A | Scale 1:1 | 2024-10 |