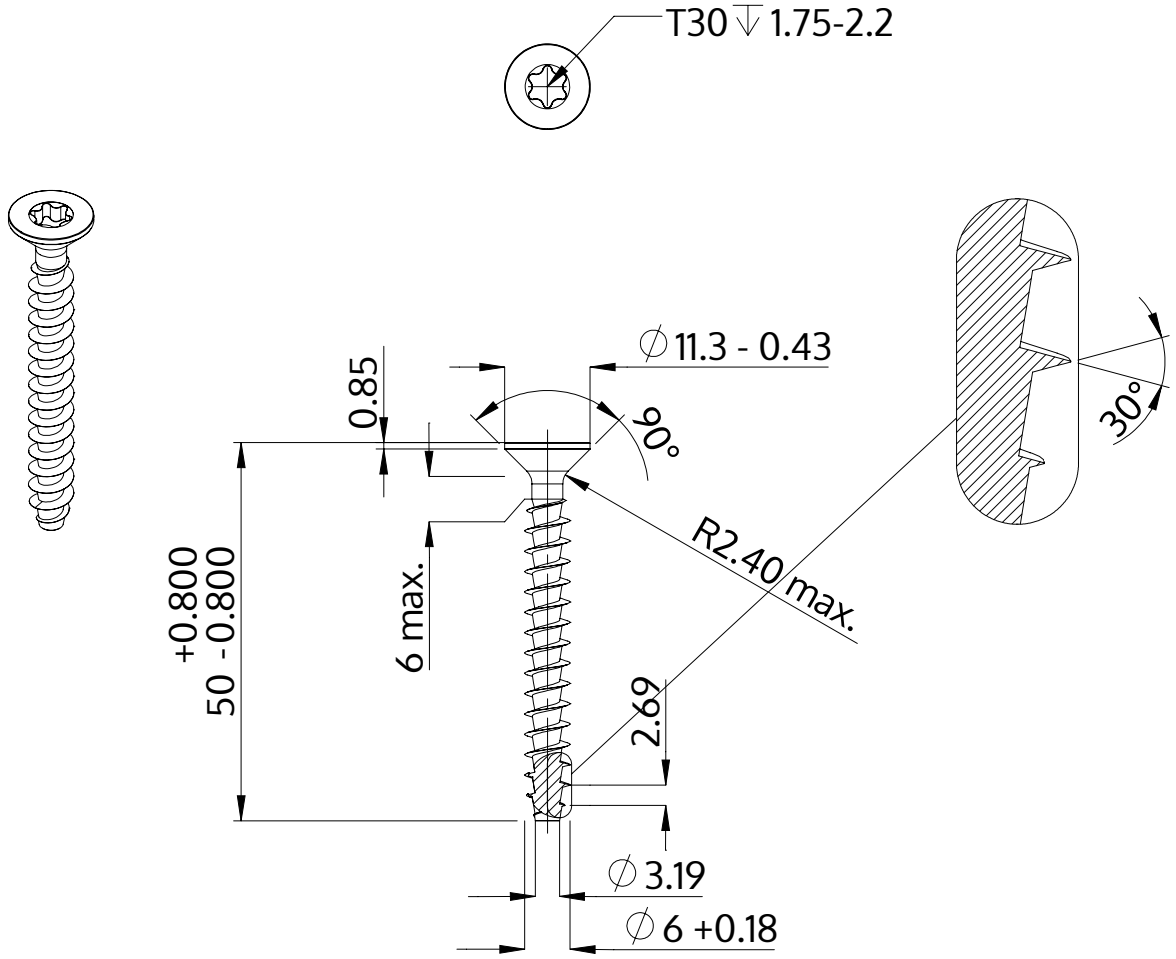

Description	STP41A 6.0x50.0 - T30
Material	stainless-steel A2
Surface	bright, pickled and passivated
Weight	5.973 kg / 1000 pieces

SCREWERK	**STP41A0600500E**	
Metric Drawing A4	Scale 1:1	2024-10