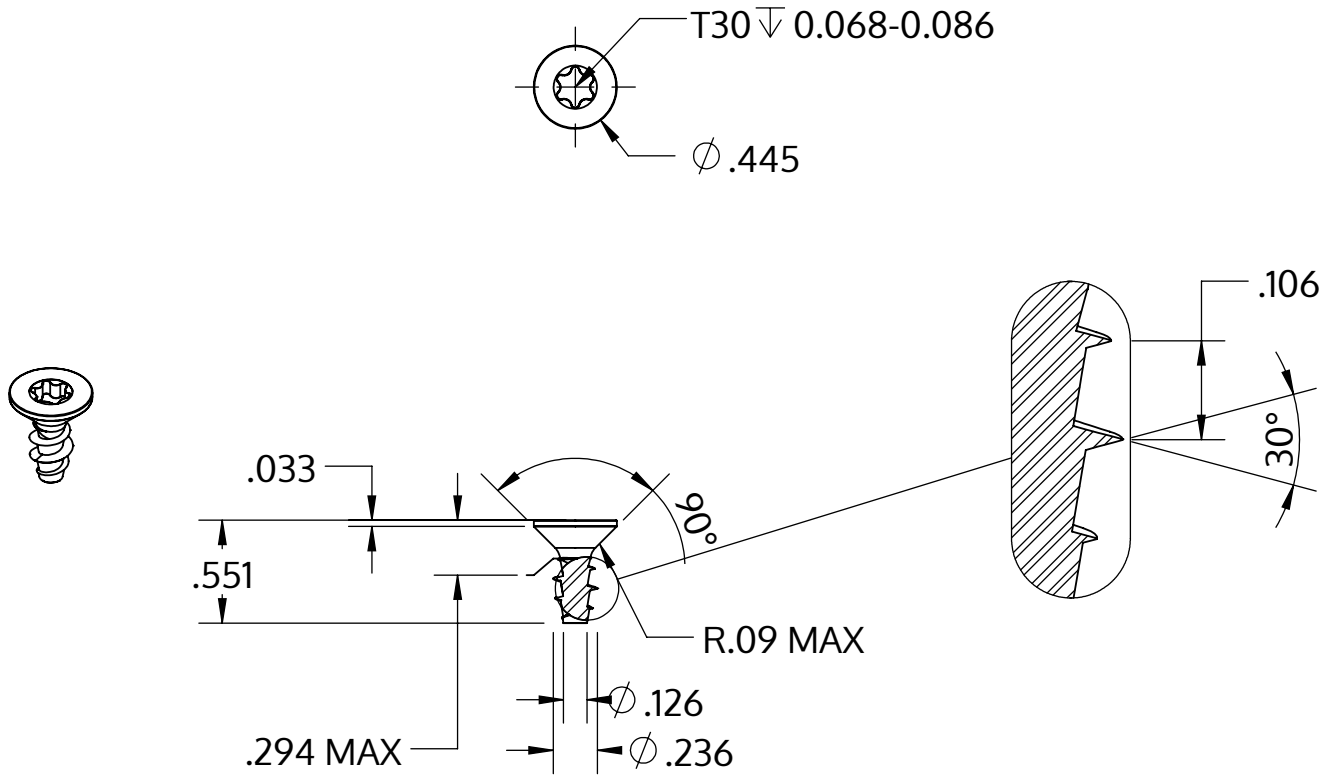


| | |
|---|---|
| Metric size | M6 x 2.69 mm |
| US size (converted) | #0.236-9 |
| | Tolerances [inch] |
| Length | +/- 0.021 |
| Head diameter | +0 / -0.016 |
| Head height | +/- 0.004 |
| Thread diameter | +0.007 / -0 |

| | |
|---|---|
| Descrizione | STP41A 6.0x14.0 - T30 |
| Materiale | acciaio, temprato |
| Superficie | zincato 5-7 micron, ricotto, blu / trasparente passivato |
| Peso | 2.297 kg / 1000 pezzi |

| | | |
|---|---|---|
| SCREWERK | **STP41A0600140S** | |
| _Zoll Zeichnung Größe A | Scala 1:1 | 2024-10 |