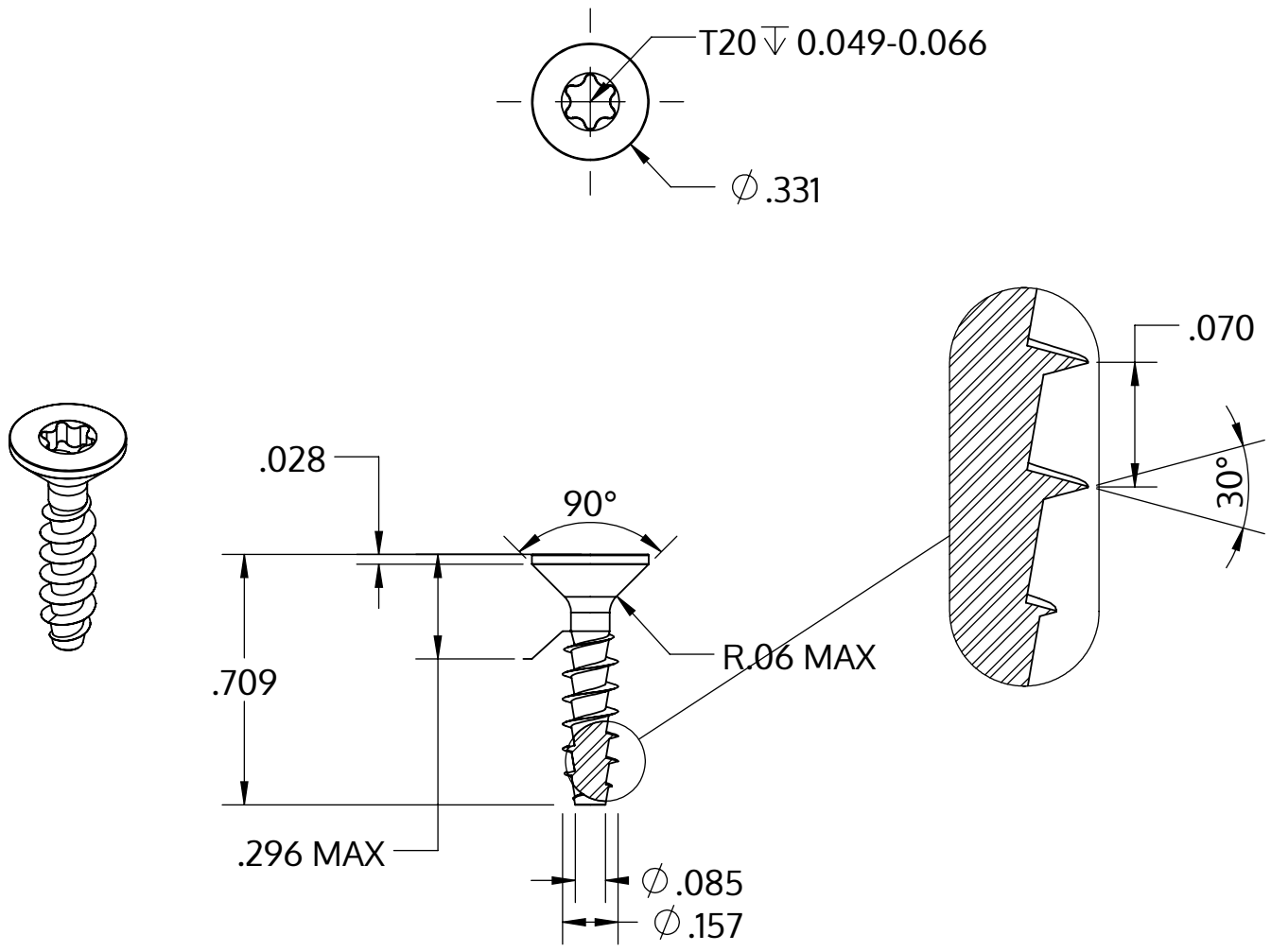


| | |
|---|---|
| Metric size | M4 x 1.79 mm |
| US size (converted) | #8-14 |
| | Tolerances [inch] |
| Length | +/- 0.021 |
| Head diameter | +0 / -0.014 |
| Head height | +/- 0.004 |
| Thread diameter | +0.007 / -0 |

| | |
|---|---|
| Description | STP41A 4.0x18.0 - T20 |
| Matière | Acier,trempé et revenu |
| Surface | Zinc Nickel passivé noir, trempée, scéllée |
| Poids | 1.319 kg / 1000 Unité |

| | | |
|---|---|---|
| SCREWERK | **STP41A0400180B** | |
| _Zoll Zeichnung Größe A | Redimensionner None:1 | 2024-04 |