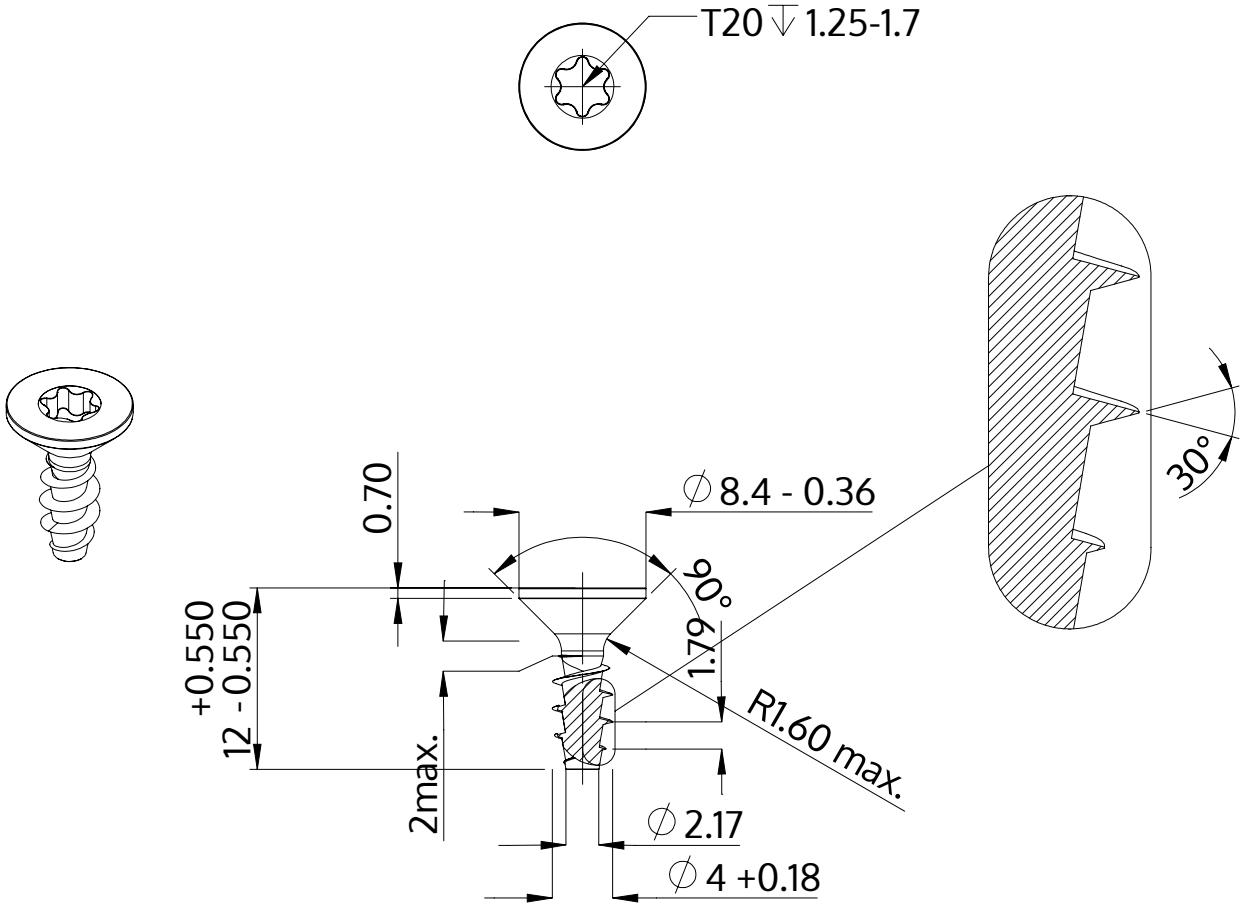

Description	STP41A 4.0x12.0 - T20
Material	stainless-steel A2
Surface	bright, pickled and passivated
Weight	1.029 kg / 1000 pieces

SCREWERK	**STP41A0400120E**	
Metric Drawing A4	Scale 2:1	2024-10