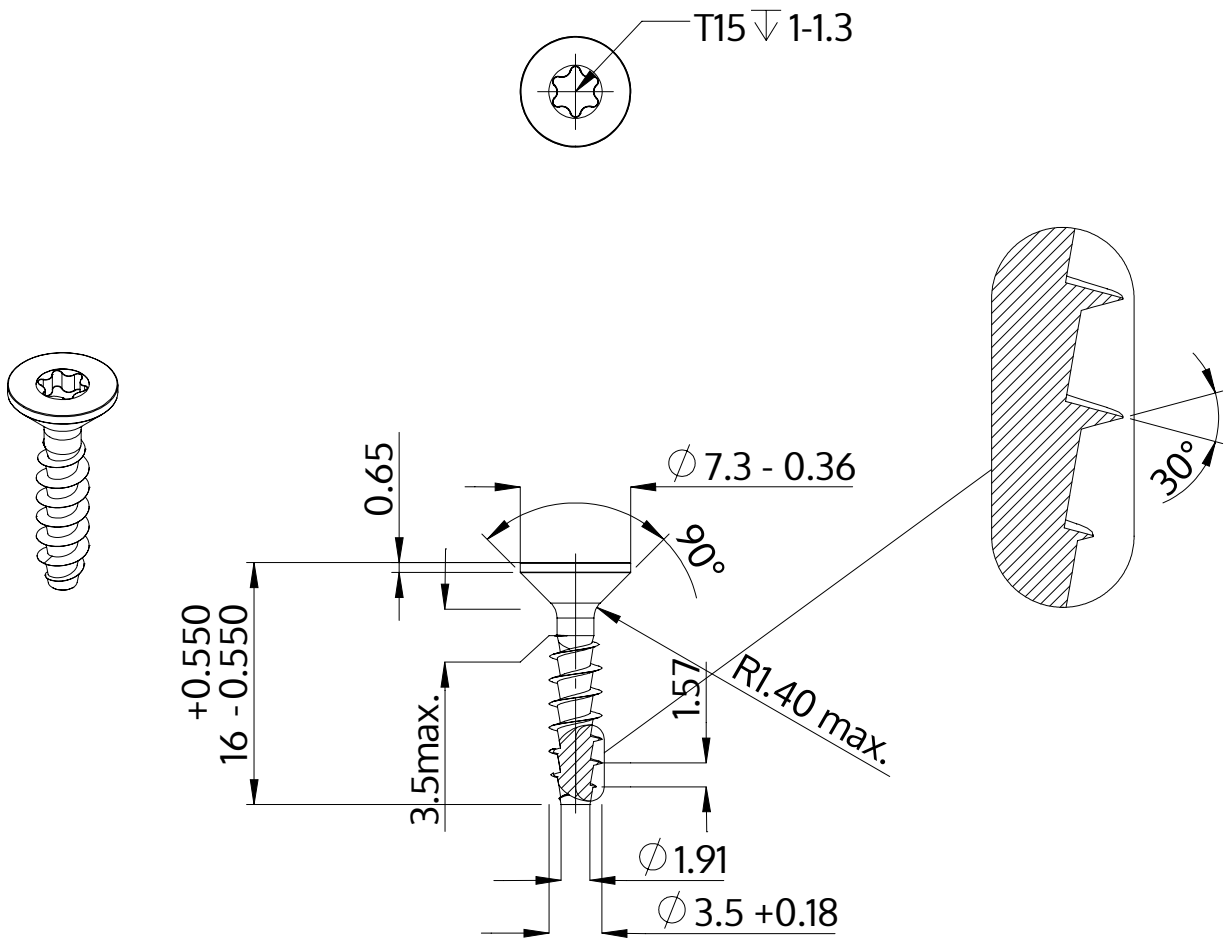

Description	STP41A 3.5x16.0 - T15
Material	steel, hardened
Surface	Zinc-Nickel-plated min. 5µm, passivated black/ Cr-VI-free, baked, sealed
Weight	0.868 kg / 1000 pieces

SCREWERK	**STP41A0350160B**	
Metric Drawing A4	Scale 2:1	2024-10