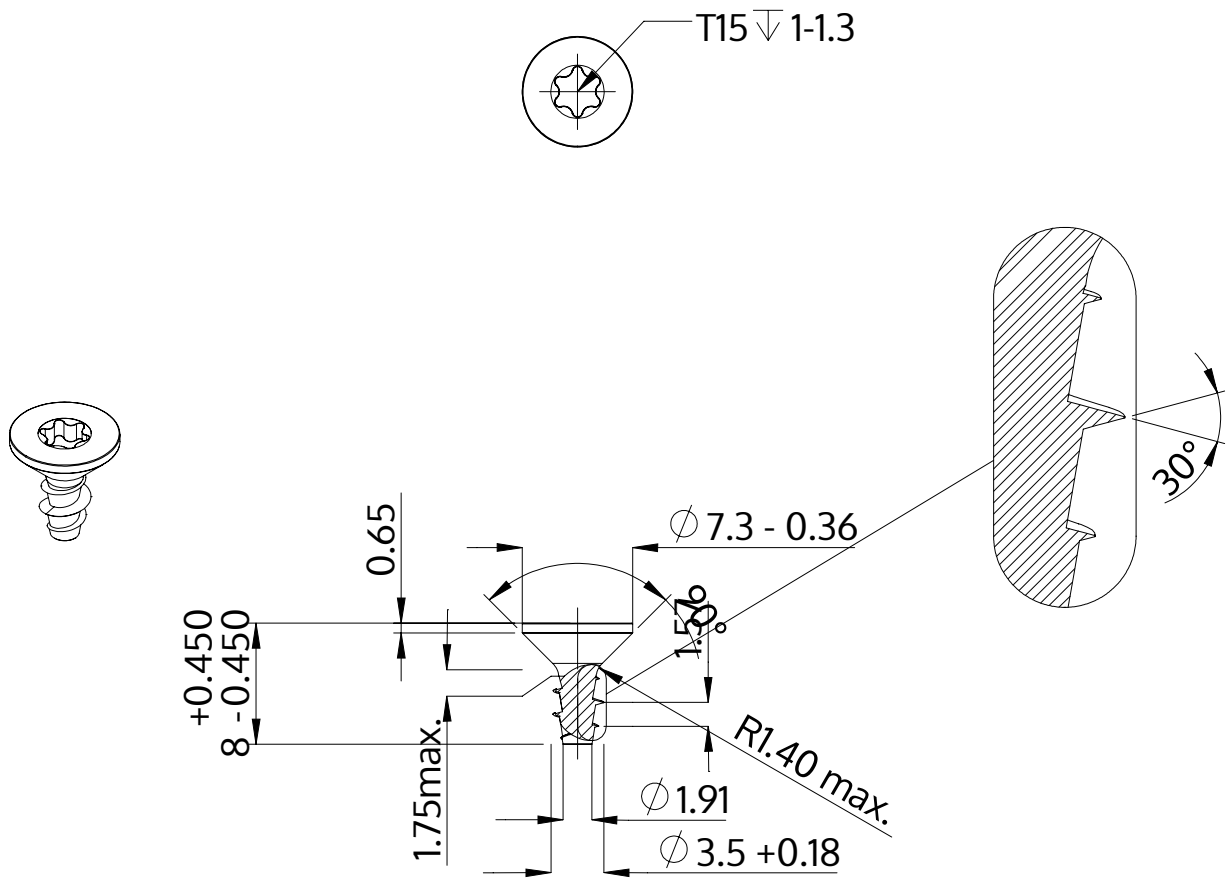

Description	STP41A 3.5x10.0 - T15
Material	steel, hardened
Surface	zinc-plated 5-7 µm, baked, blue / transparent passivated
Weight	0.645 kg / 1000 pieces

SCREWERK	**STP41A0350100S**	
Metric Drawing A4	Scale 2:1	2024-10