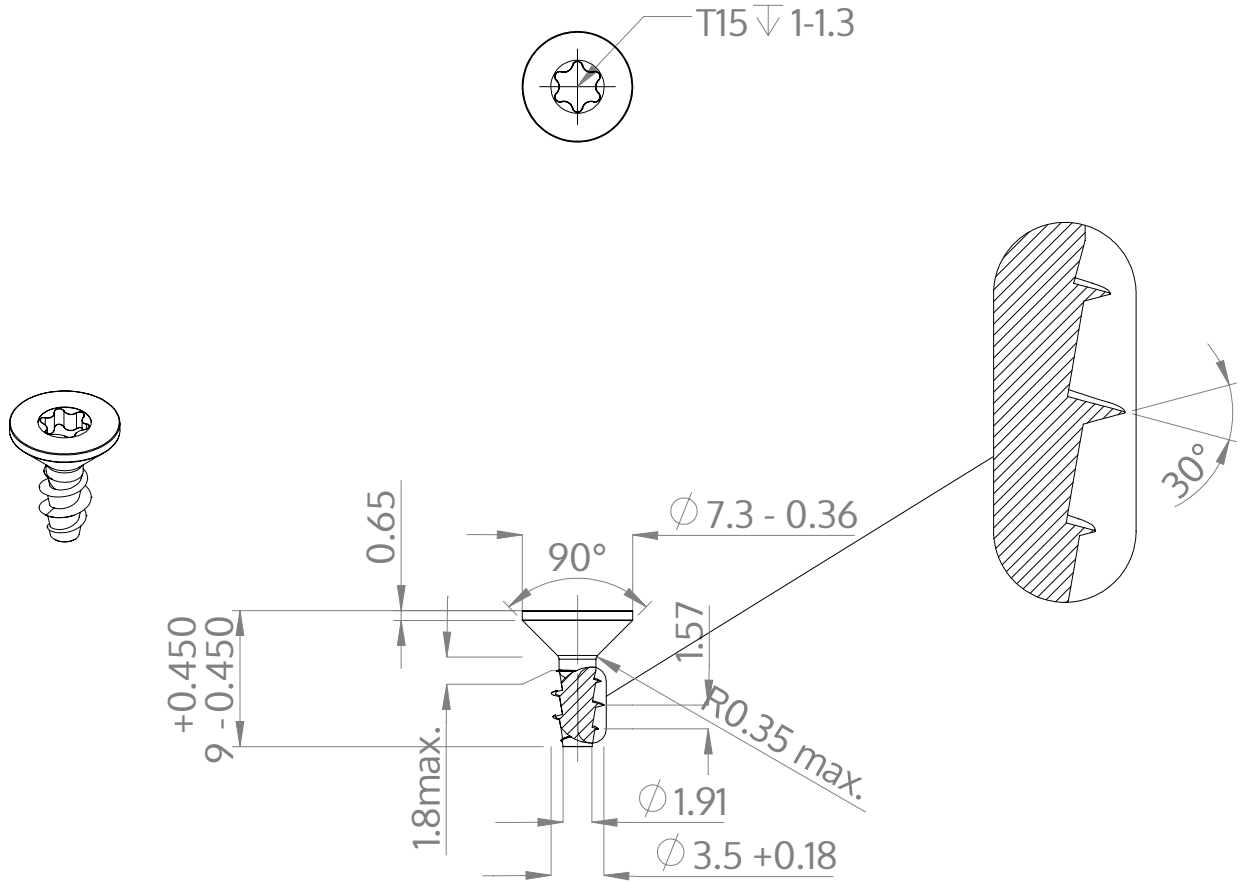

Description	STP41A 3.5x9.0 - T15
Material	stainless-steel A2
Surface	bright, pickled and passivated
Weight	0.607 kg / 1000 pieces

SCREWERK	**STP41A0350090E**	
Metric Drawing A4	Scale 2:1	2025-04