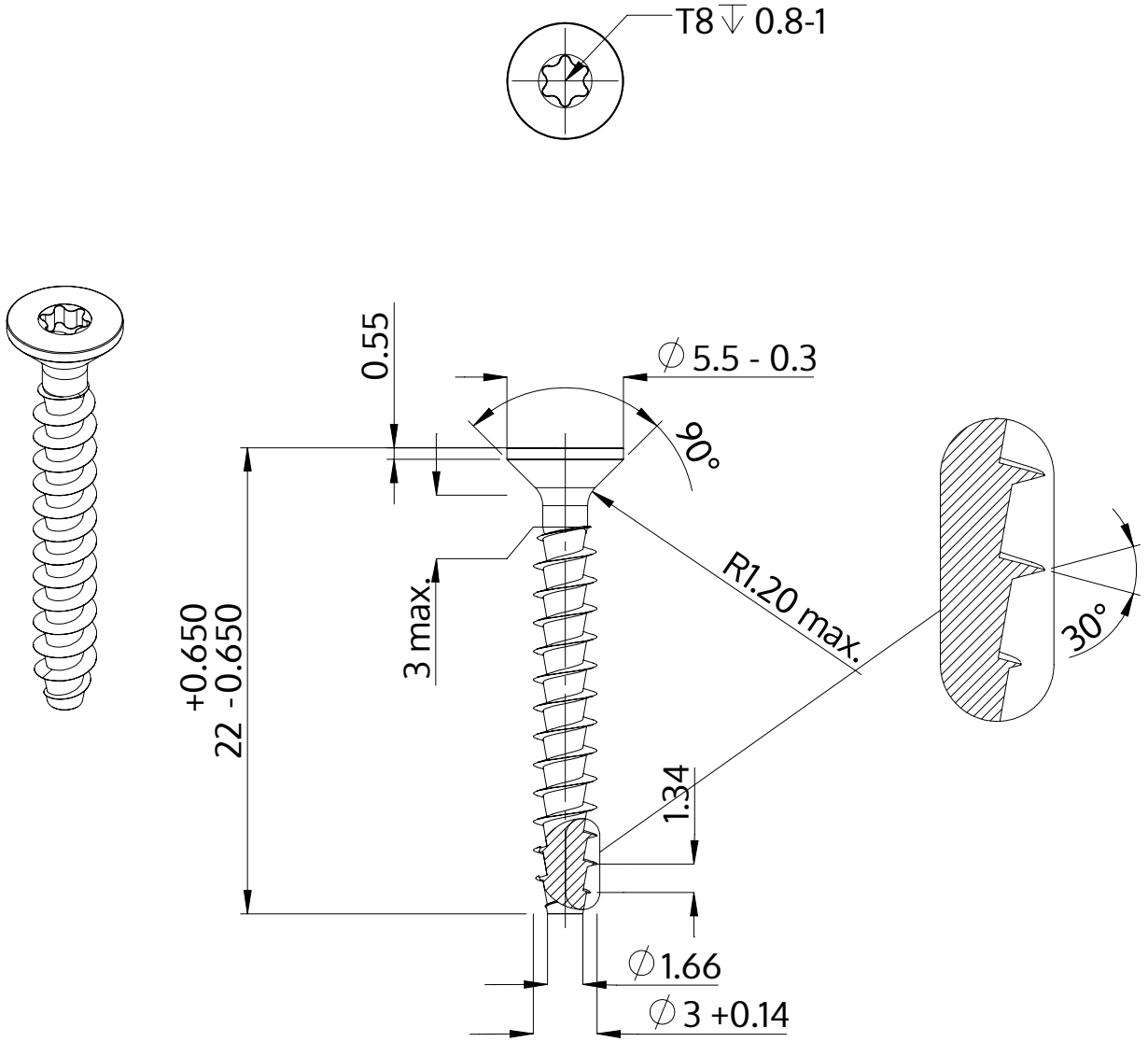

Description	STP41A 3.0x22.0 - T8
Material	stainless-steel A2
Surface	bright, pickled and passivated
Weight	0.743 kg / 1000 pieces

SCREWERK	**STP41A0300220E**	
Metric Drawing A4	Scale 3:1	2024-10