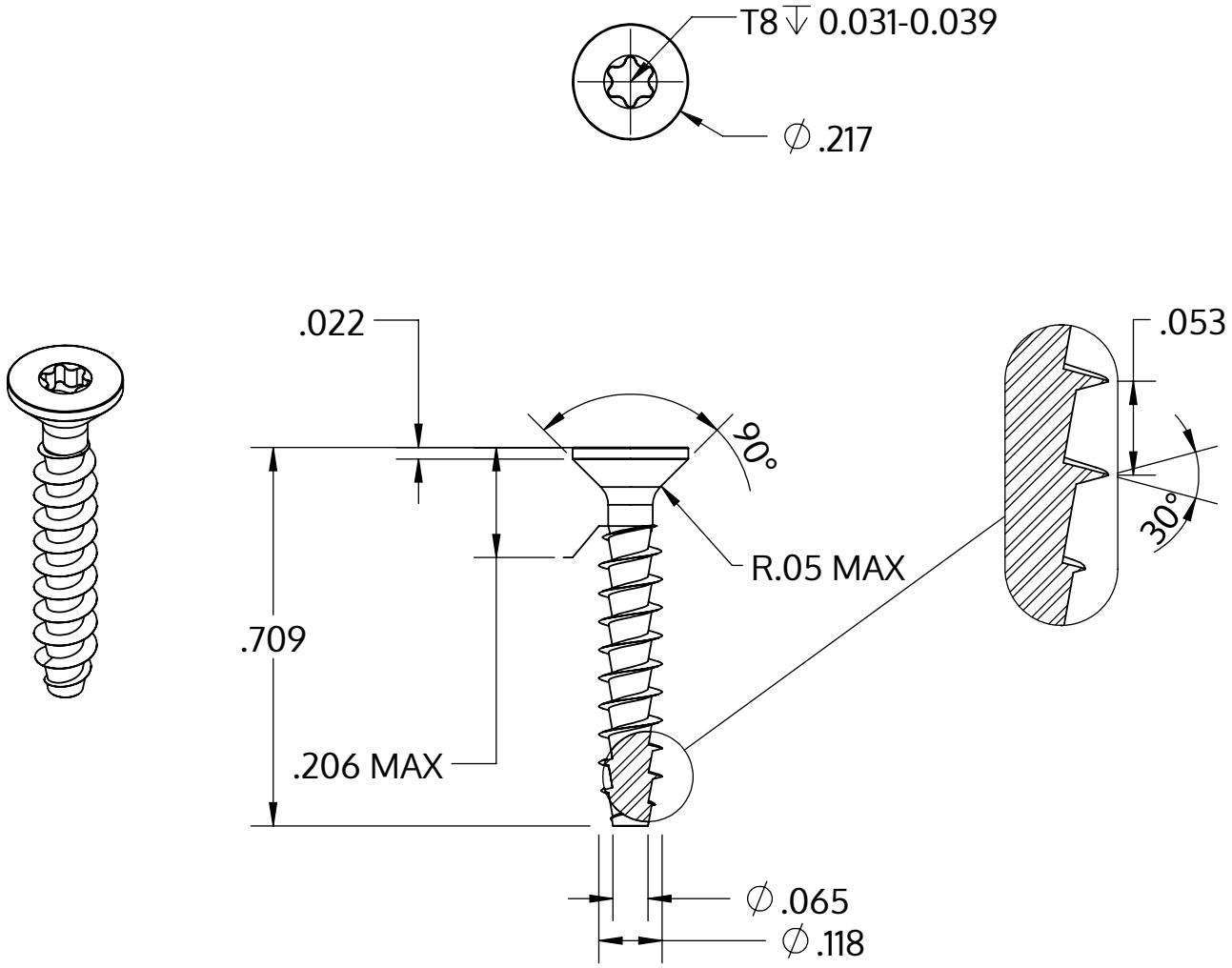

Metric size	M3 x 1.34 mm
US size (converted)	#4-19
	Tolerances [inch]
Length	+/- 0.021
Head diameter	+0 / -0.011
Head height	+/- 0.004
Thread diameter	+0.005 / -0

Descrizione	STP41A 3.0x18.0 - T8
Materiale	acciaio inossidabile A2
Superficie	bianco-decapato e passivato
Peso	0.628 kg / 1000 pezzi

SCREWERK	**STP41A0300180E**	
_Zoll Zeichnung Größe A	Scala 3:1	2024-10