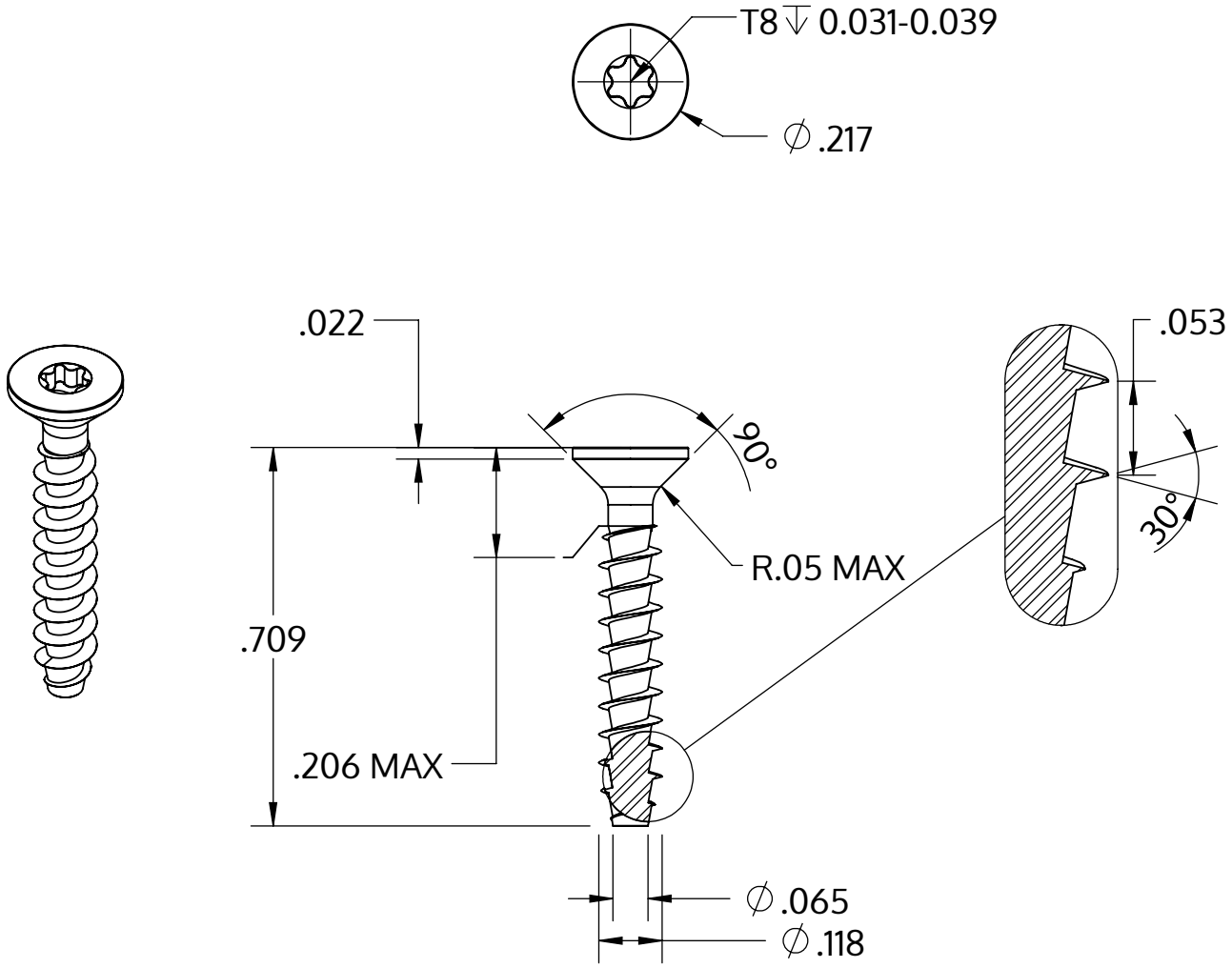


| | |
|---|---|
| Metric size | M3 x 1.34 mm |
| US size (converted) | #4-19 |
| | Tolerances [inch] |
| Length | +/- 0.021 |
| Head diameter | +0 / -0.011 |
| Head height | +/- 0.004 |
| Thread diameter | +0.005 / -0 |

| | |
|---|---|
| Descriere | STP41A 3.0x18.0 - T8 |
| Material | oțel, călit |
| Exterior | zincat, Nichelat, pasivat negru / nu conține Cr-VI, recopt, ermetizat |
| Greutate | 0.609 kg / 1000 unități |

| | | |
|---|---|---|
| SCREWERK | **STP41A0300180B** | |
| _Zoll Zeichnung Größe A | Scalarea None:1 | 2024-04 |