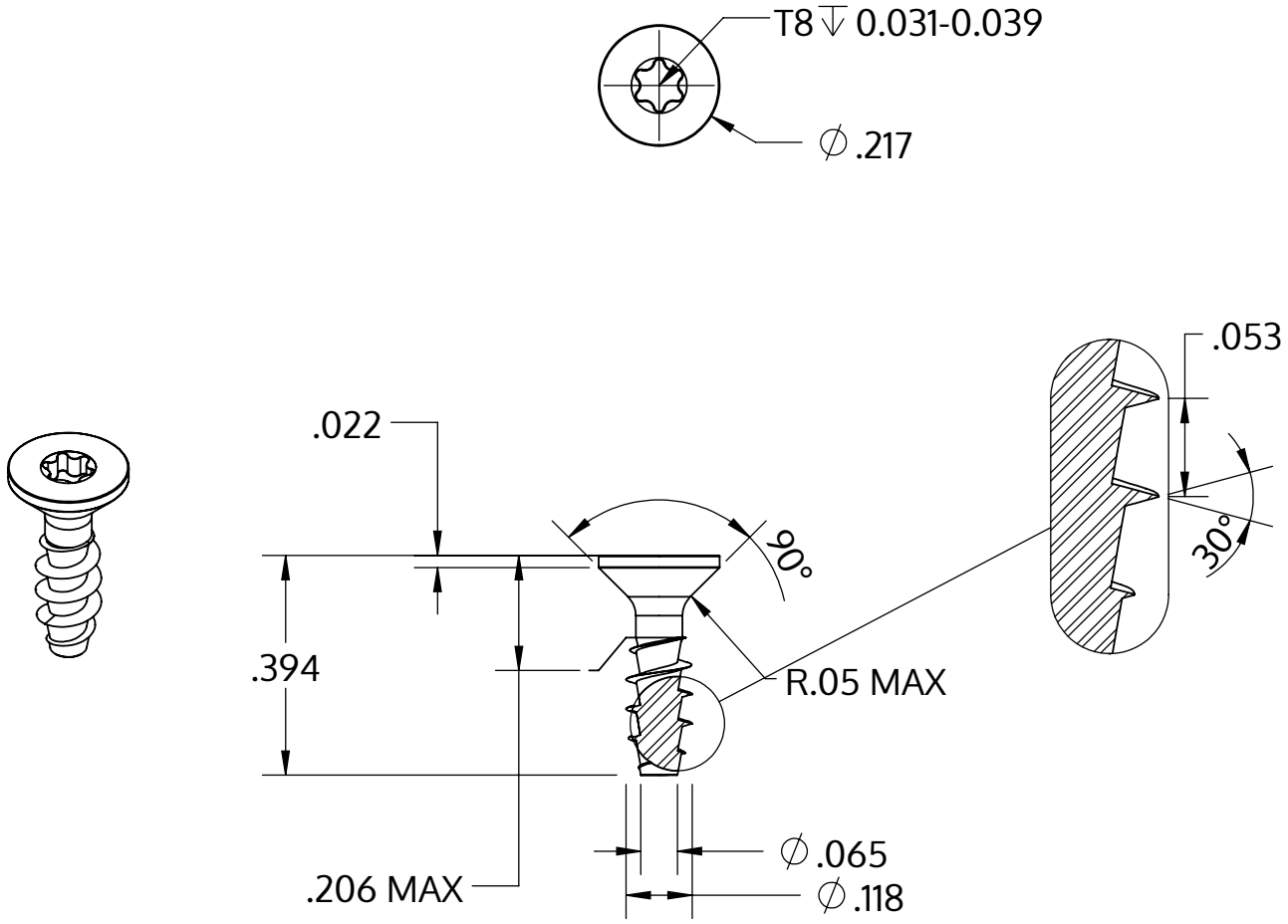

Metric size	M3 x 1.34 mm
US size (converted)	#4-19
	Tolerances [inch]
Length	+/- 0.017
Head diameter	+0 / -0.011
Head height	+/- 0.004
Thread diameter	+0.005 / -0

Description	STP41A 3.0x10.0 - T8
Material	stainless-steel A2
Surface	bright, pickled and passivated
Weight	0.399 kg / 1000 pieces

SCREWERK	**STP41A0300100E**	
Inch Drawing Size A	Scale 3:1	2024-10