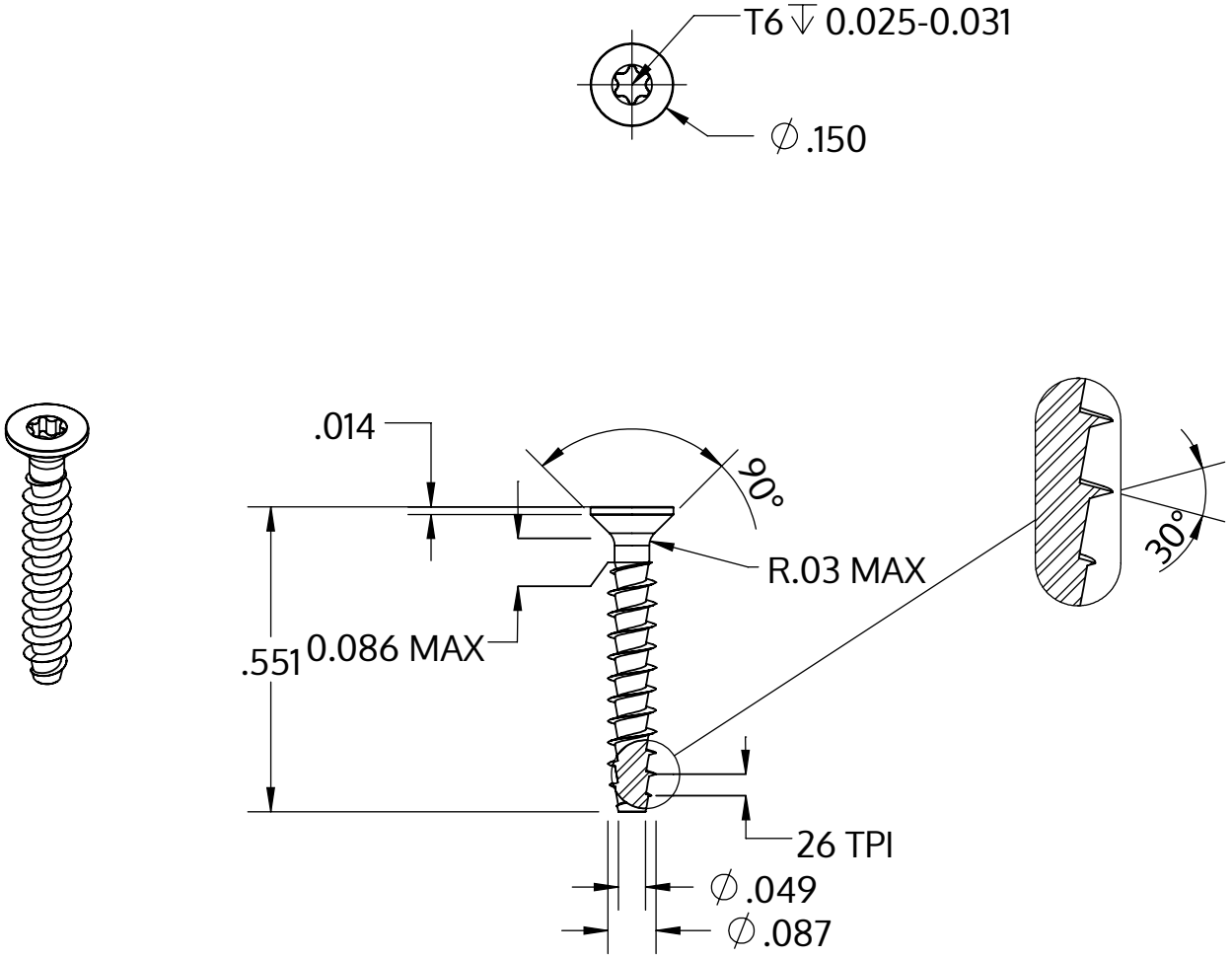

Metric size	M2.2 x 0.98 mm
US size (converted)	#2-26
	Tolerances [inch]
Length	+/- 0.021
Head diameter	+0 / -0.011
Head height	
Thread diameter	+0.005 / -0

Descriere	STP41A 2.2x14.0 - T6
Material	oțel, călit
Exterior	zincat 5-7 µm, recopt, pasivat transparent/albastru
Greutate	0.262 kg / 1000 unități

SCREWERK	**STP41A0220140S**	
_Zoll Zeichnung Größe A	Scalarea 3:1	2024-10