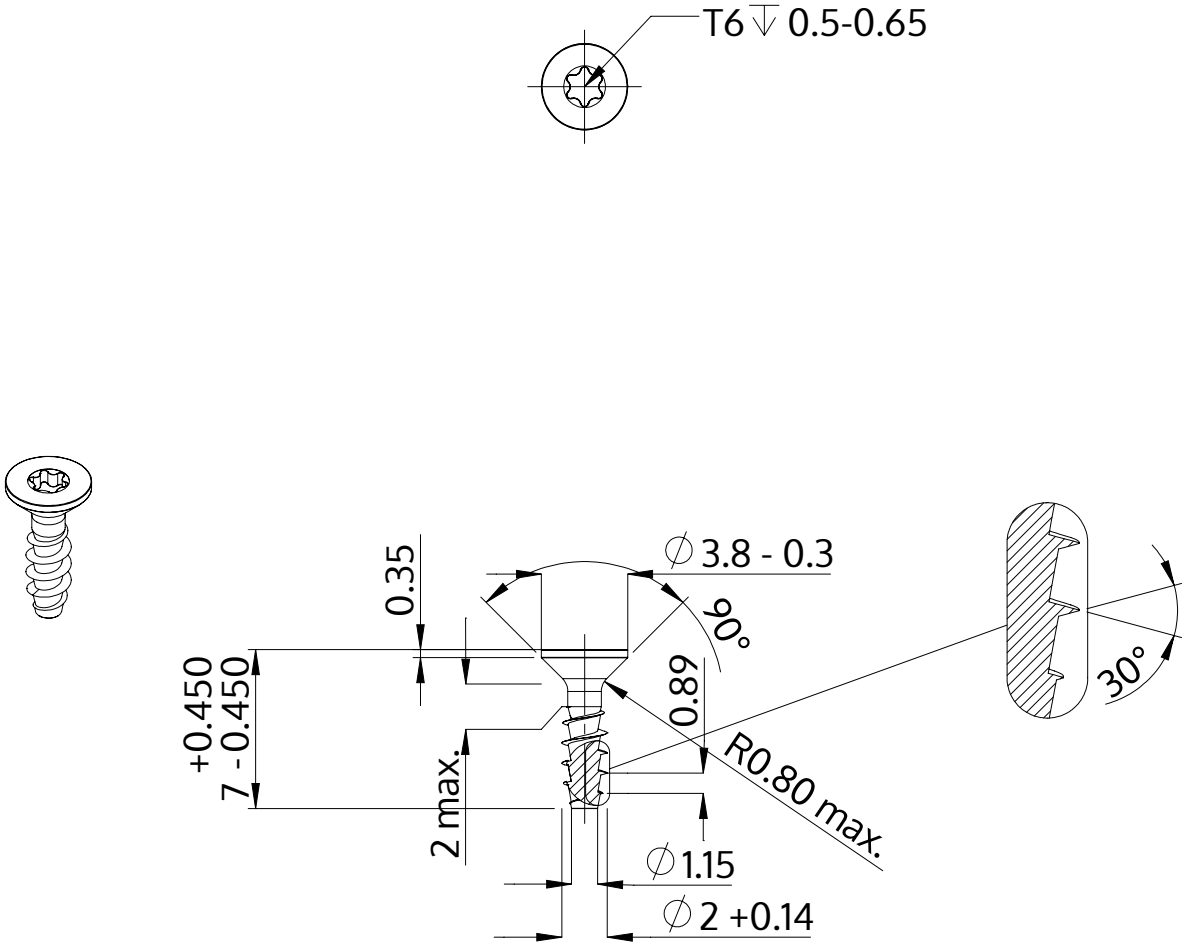

Description	STP41A 2.0x7.0 - T6
Material	steel, hardened
Surface	Zinc-Nickel-plated min. 5µm, passivated black/ Cr-VI-free, baked, sealed
Weight	0.132 kg / 1000 pieces

SCREWERK	**STP41A0200070B**	
Metric Drawing A4	Scale 3:1	2024-10