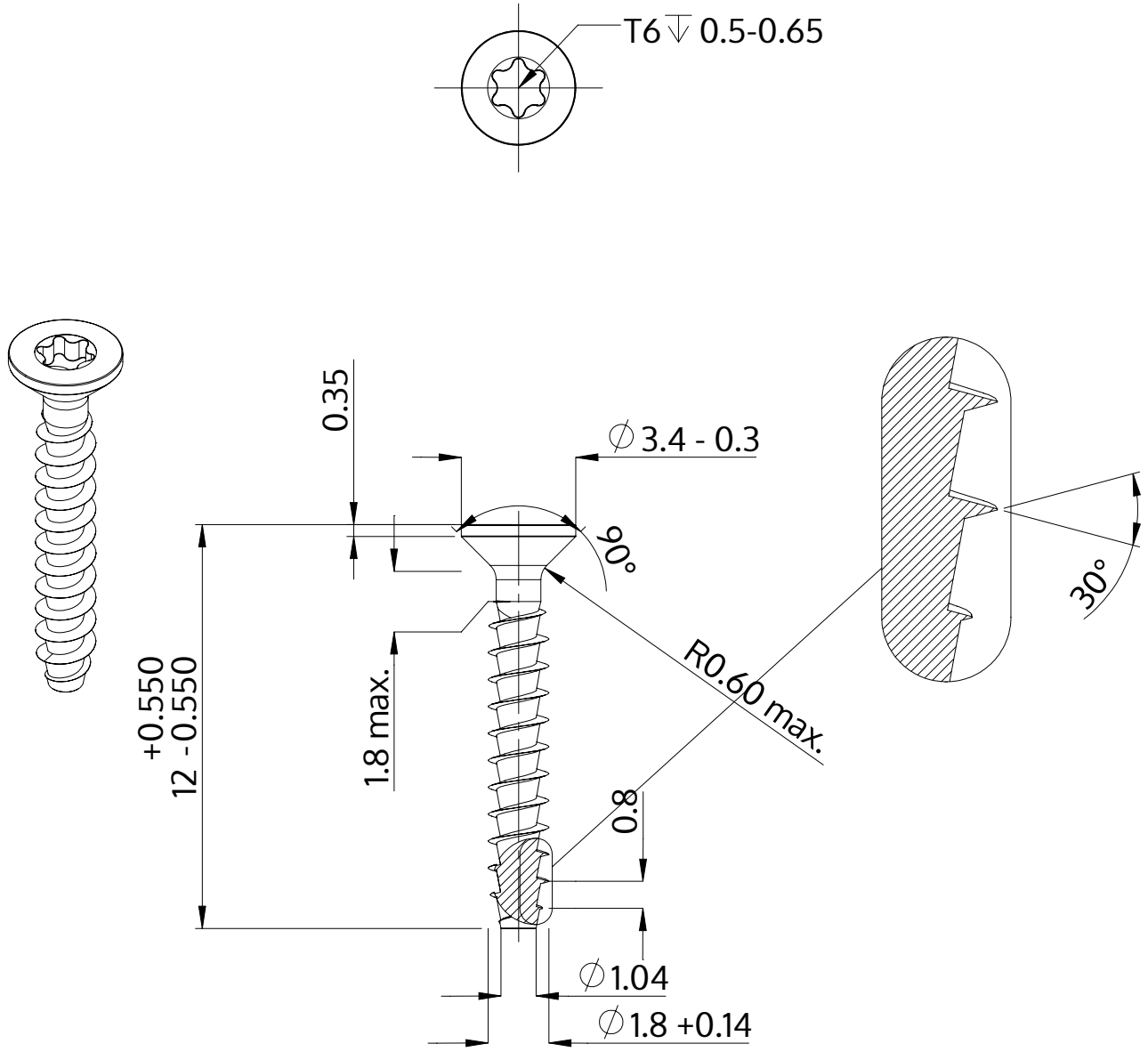

Description	STP41A 1.8x12.0 - T6
Material	stainless-steel A2
Surface	bright, pickled and passivated
Weight	0.167 kg / 1000 pieces

SCREWERK	**STP41A0180120E**	
Metric Drawing A4	Scale None:1	2024-04