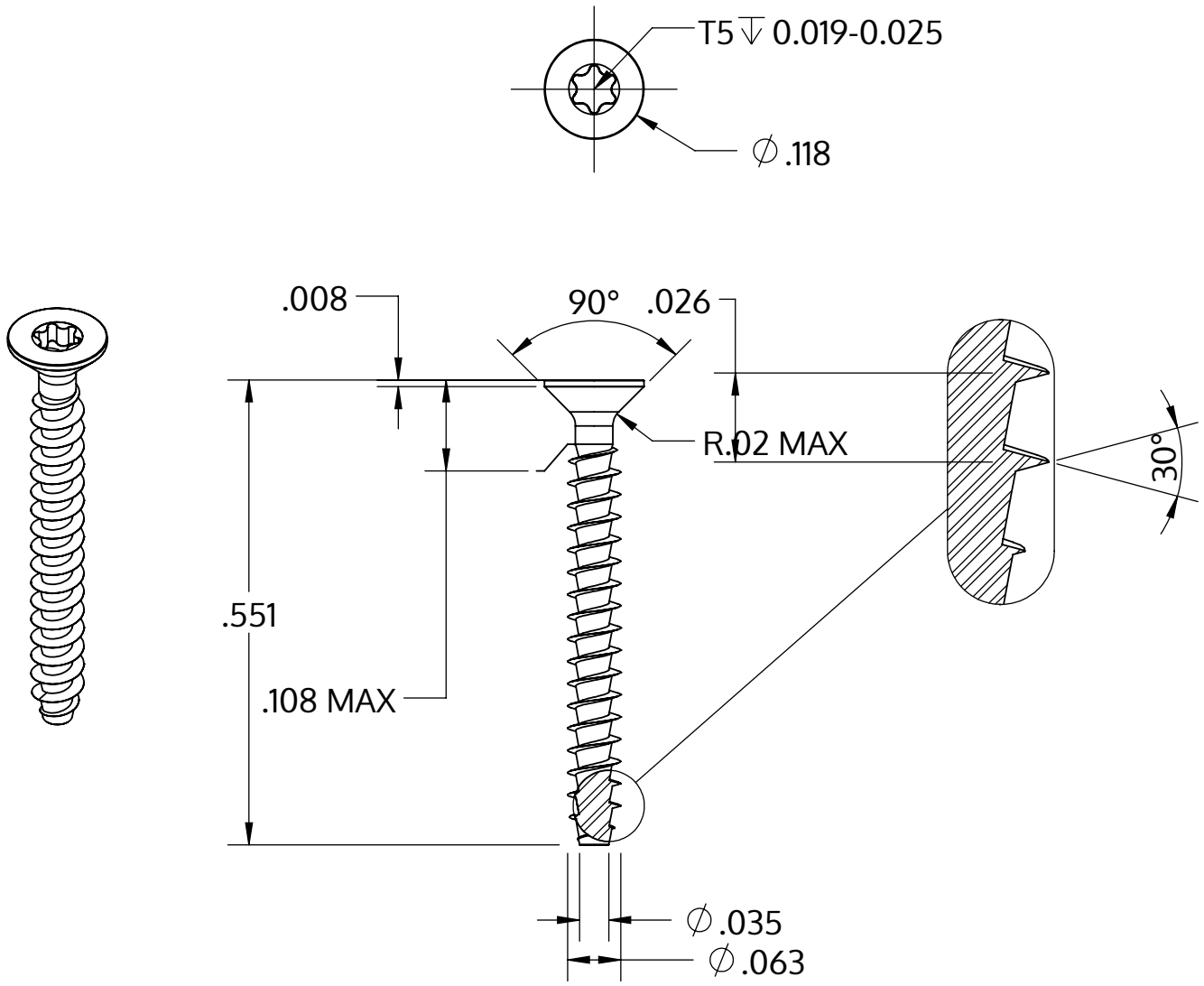

Metric size	M1.6 x 0.67 mm
US size (converted)	#0.062-37
	Tolerances [inch]
Length	+/- 0.021
Head diameter	+0 / -0.009
Head height	+/- 0.004
Thread diameter	+0.005 / -0

Description	STP41A 1.6x14.0 - T5
Material	stainless-steel A2
Surface	bright, pickled and passivated
Weight	0.143 kg / 1000 pieces

SCREWERK	**STP41A0160140E**	
Inch Drawing Size A	Scale 5:1	2024-10