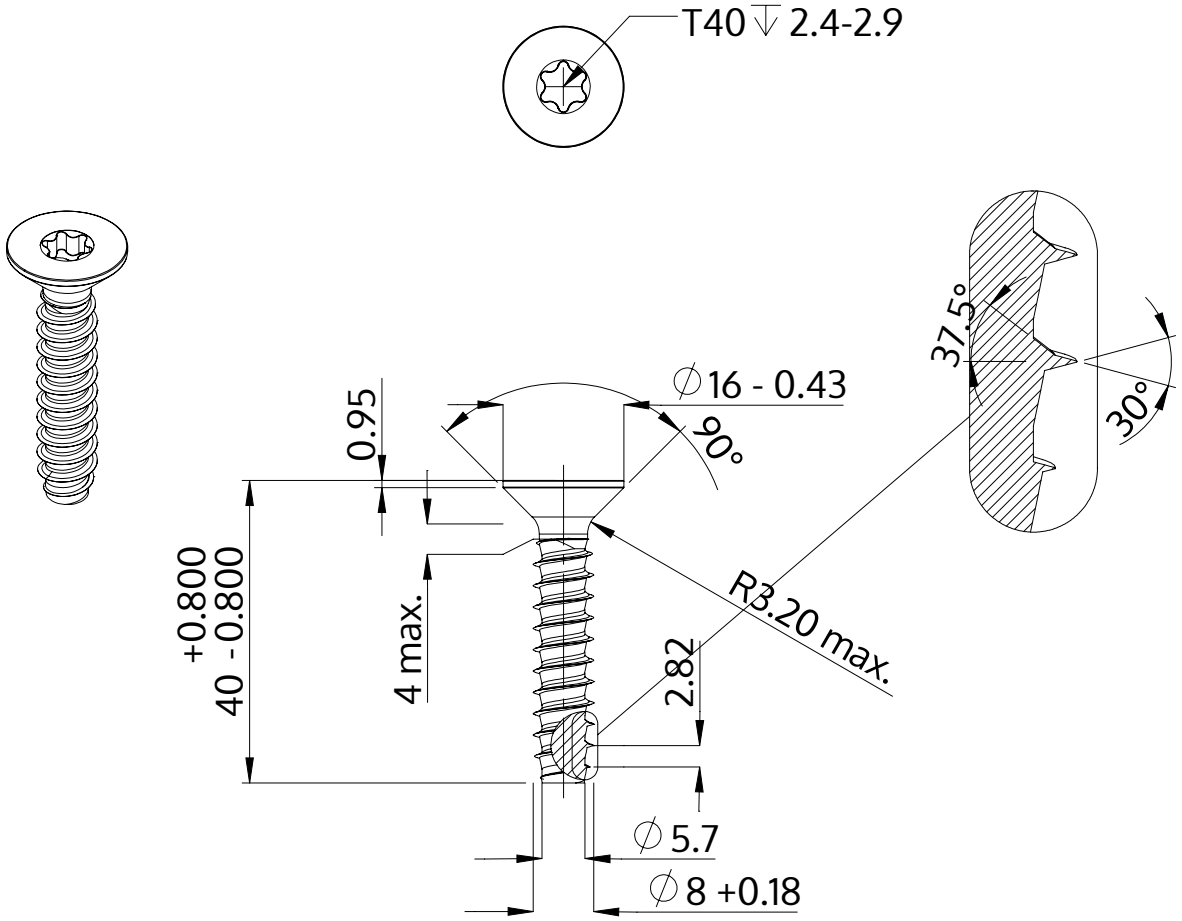

Description	STP41 8.0x40.0 - T40
Material	stainless-steel A2
Surface	bright, pickled and passivated
Weight	12.604 kg / 1000 pieces

SCREWERK	**STP410800400E**	
Metric Drawing A4	Scale 1:1	2024-10