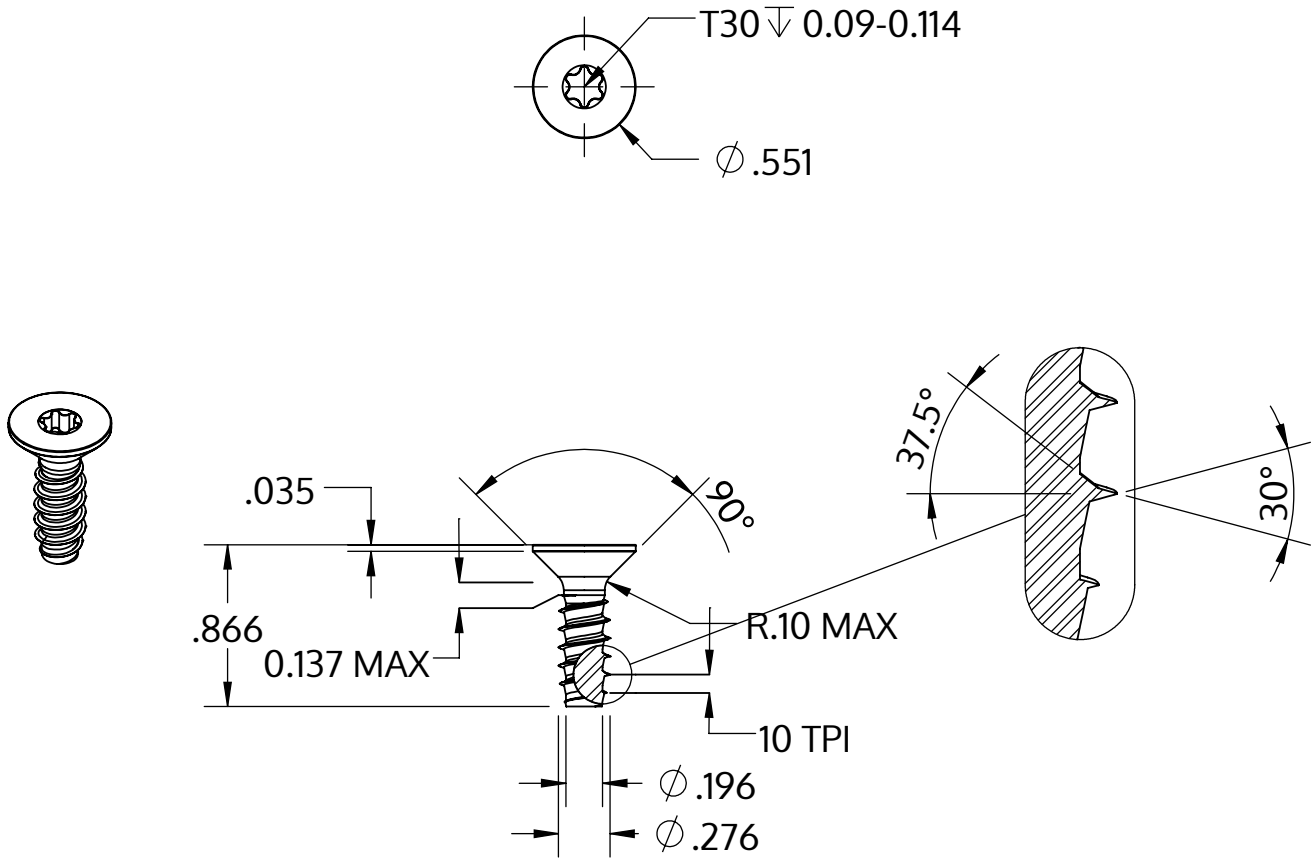

Metric size	M7 x 2.48 mm
US size (converted)	#0.275-10
	Tolerances [inch]
Length	+/- 0.025
Head diameter	+0 / -0.016
Head height	
Thread diameter	+0.007 / -0

Description	STP41 7.0x22.0 - T30
Material	steel, hardened
Surface	zinc-plated 5-7 µm, baked, blue / transparent passivated
Weight	6.052 kg / 1000 pieces

SCREWERK	**STP410700220S**	
Inch Drawing Size A	Scale 1:1	2024-10