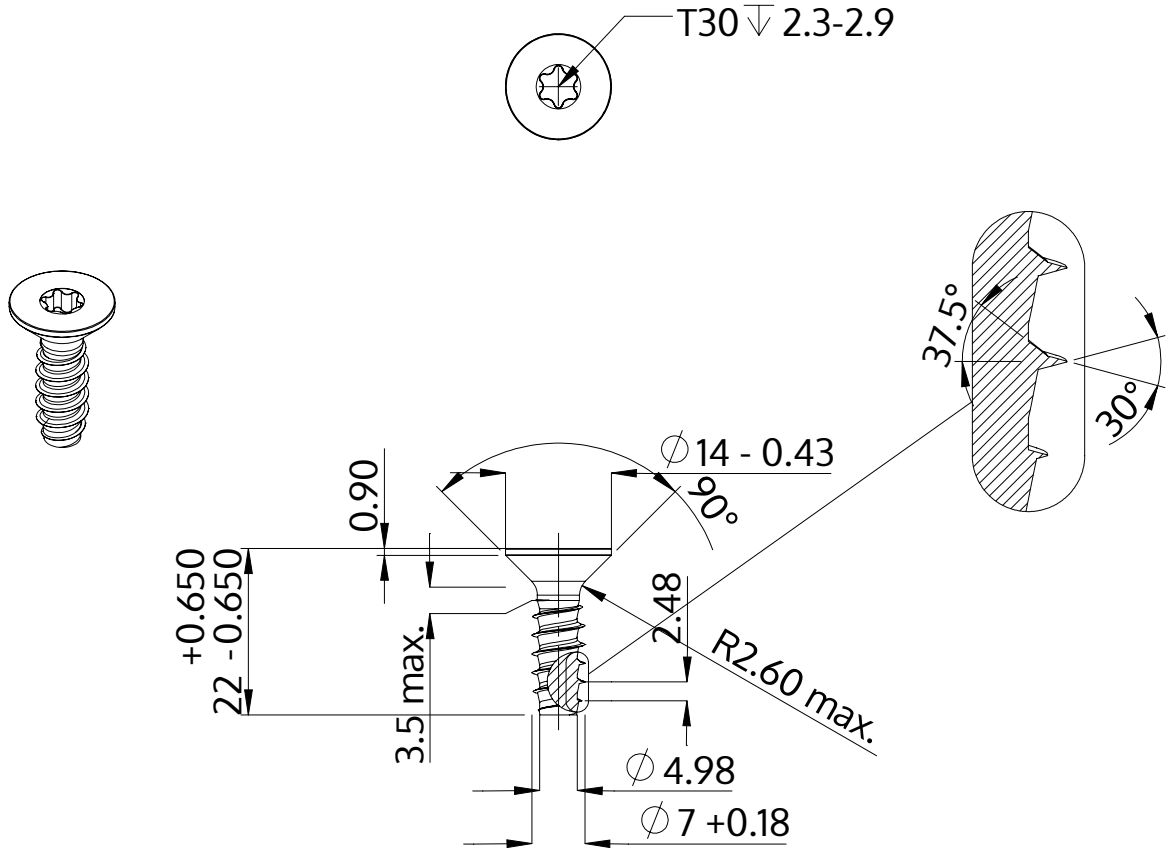

Description	STP41 7.0x22.0 - T30
Material	steel, hardened
Surface	zinc-plated 5-7 µm, baked, blue / transparent passivated
Weight	6.052 kg / 1000 pieces

SCREWERK	**STP410700220S**	
Metric Drawing A4	Scale 1:1	2024-10