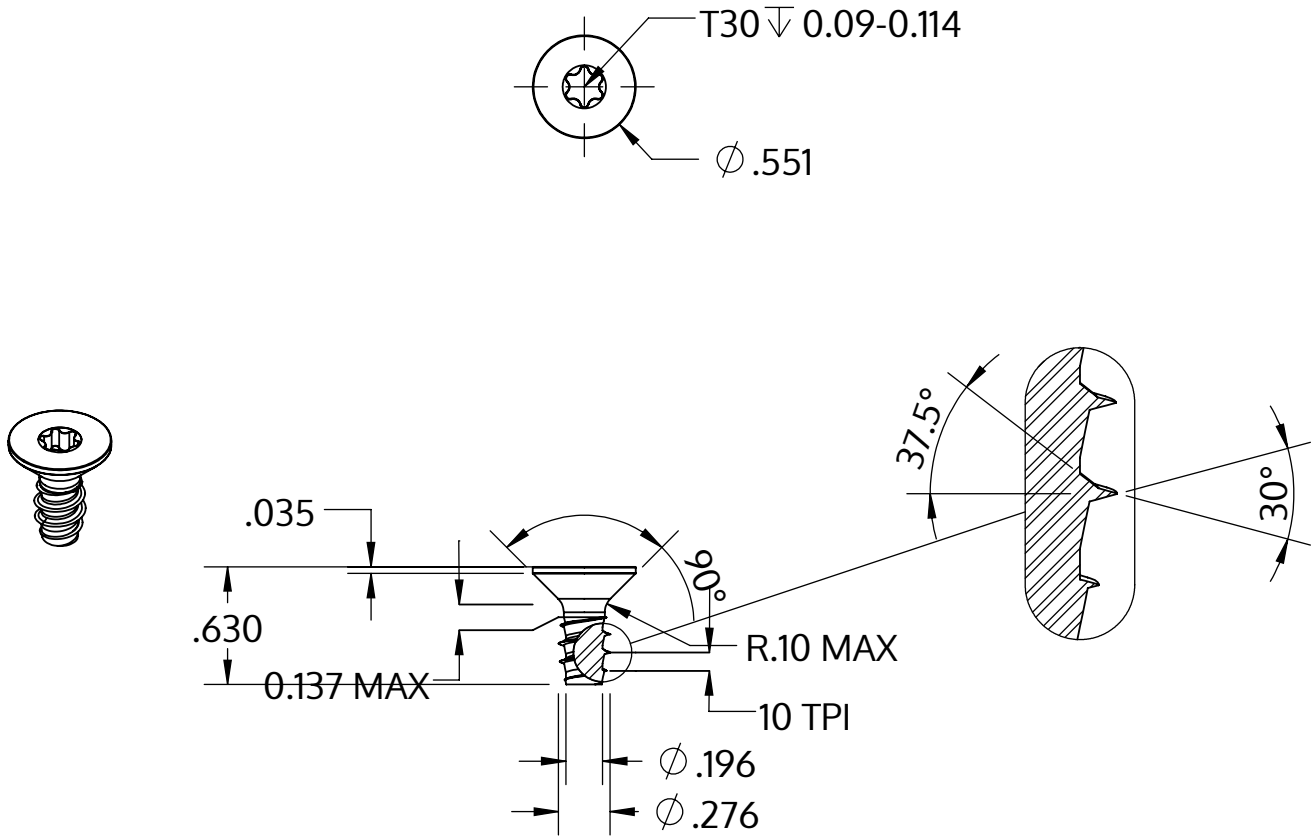

Metric size	M7 x 2.48 mm
US size (converted)	#0.275-10
	Tolerances [inch]
Length	+/- 0.021
Head diameter	+0 / -0.016
Head height	
Thread diameter	+0.007 / -0

Descriere	STP41 7.0x16.0 - T30
Material	oțel, călit
Exterior	zincat 5-7 µm, recopt, pasivat transparent/albastru
Greutate	4.917 kg / 1000 unități

SCREWERK	**STP410700160S**	
_Zoll Zeichnung Größe A	Scalarea 1:1	2024-10