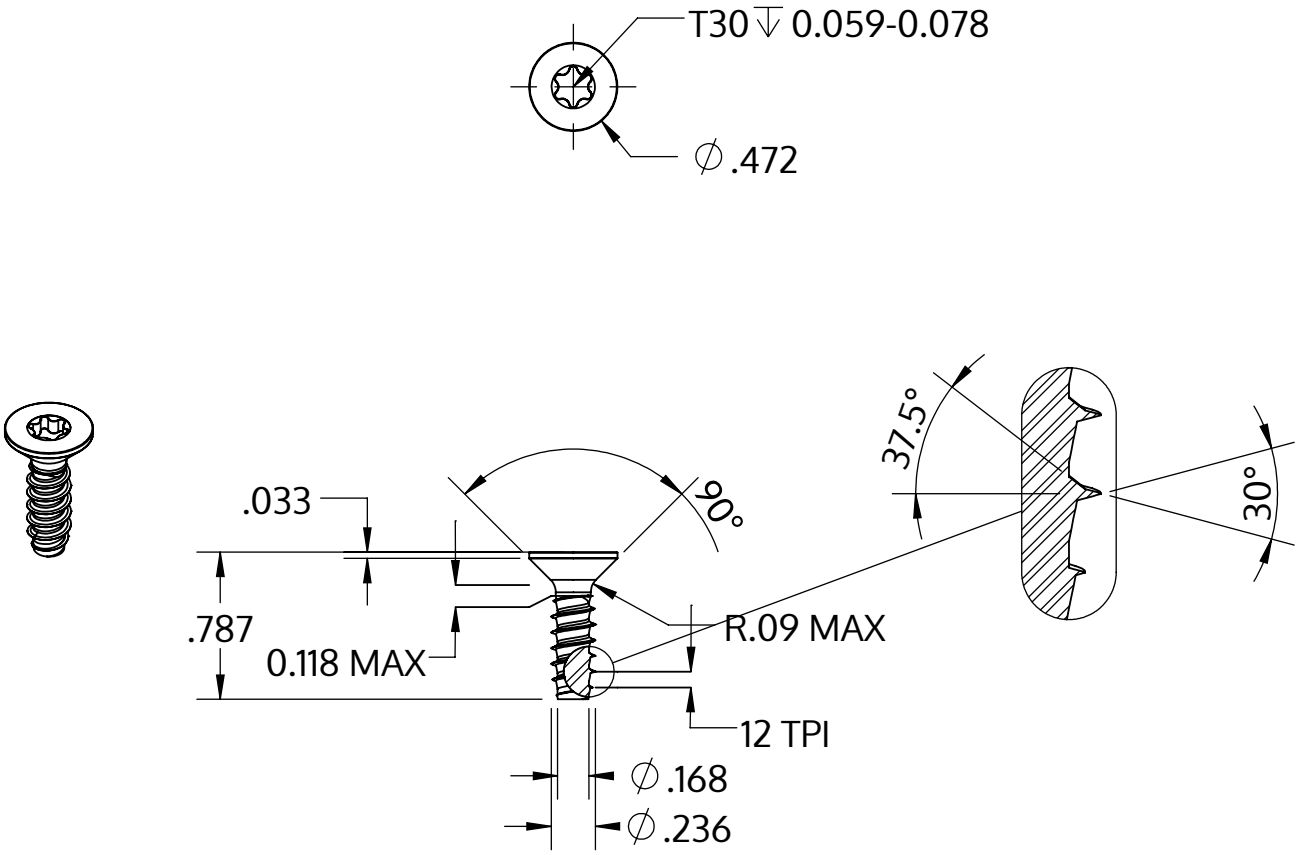


| | |
|---|---|
| Metric size | M6 x 2.14 mm |
| US size (converted) | #0.236-12 |
| | Tolerances [inch] |
| Length | +/- 0.025 |
| Head diameter | +0 / -0.016 |
| Head height | |
| Thread diameter | +0.005 / -0 |

| | |
|---|---|
| Descripción | STP41 6.0x20.0 - T30 |
| Material | Acero Inoxidable A2 |
| Superficie | Laminado brillante, barnizado y pasivado |
| Peso | 3.852 kg / 1000 Piezas |

| | | |
|---|---|---|
| SCREWERK | **STP410600200E** | |
| _Zoll Zeichnung Größe A | Escalada None:1 | 2024-04 |