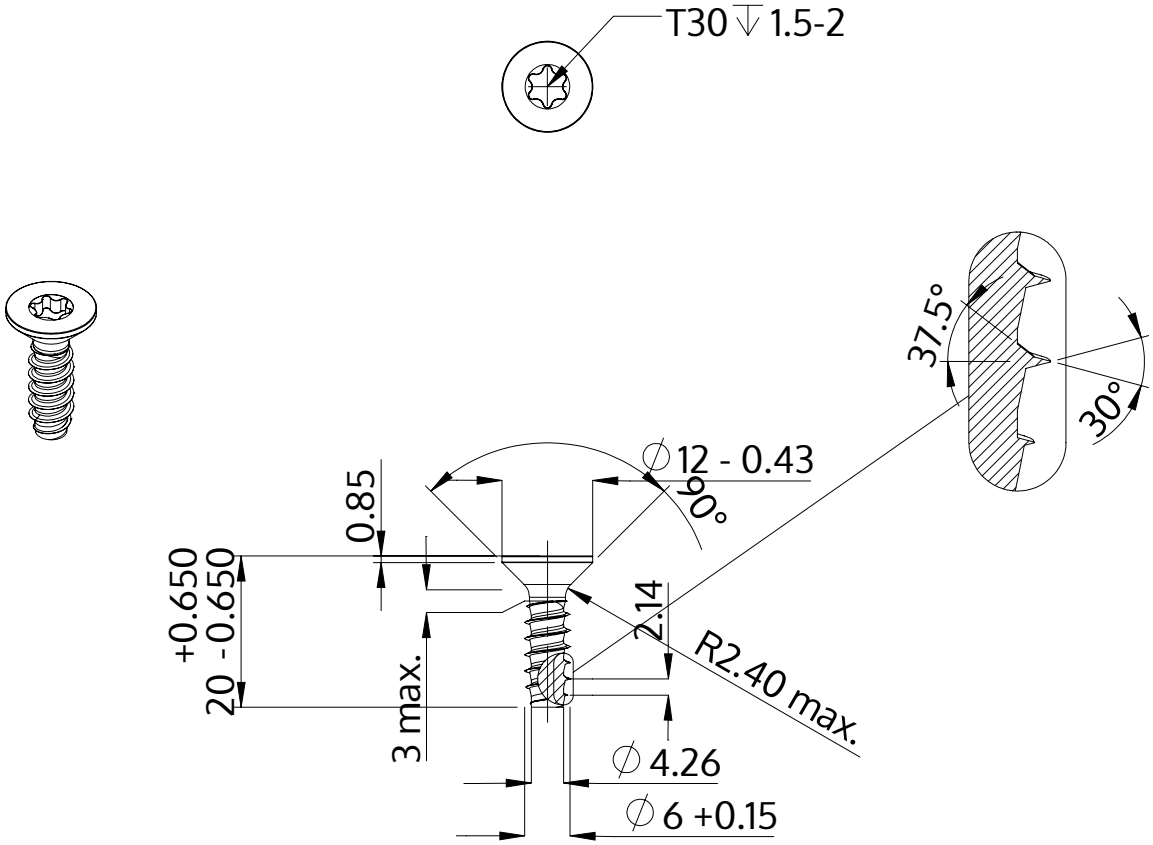

Description	STP41 6.0x20.0 - T30
Material	stainless steel A4
Surface	bright, pickled and passivated
Weight	3.852 kg / 1000 pieces

SCREWERK	**STP410600200C**	
Metric Drawing A4	Scale 1:1	2024-10