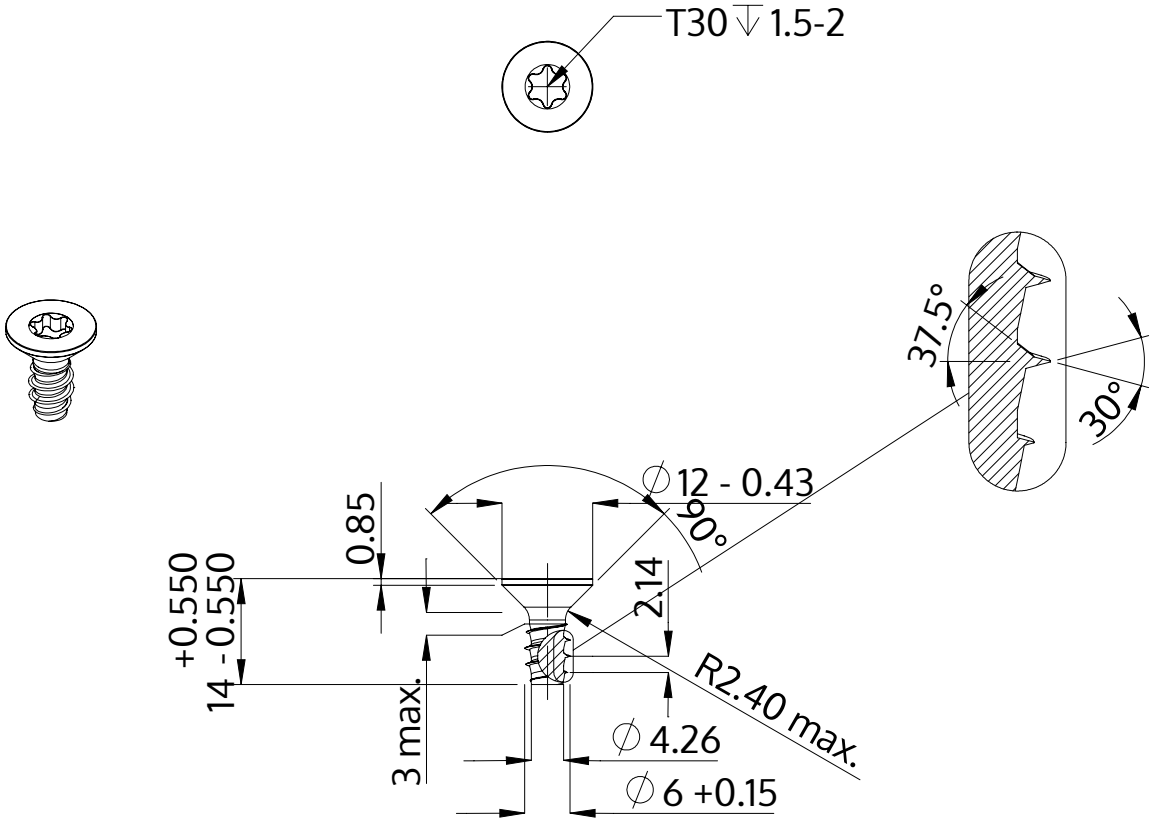

Description	STP41 6.0x14.0 - T30
Material	stainless steel A4
Surface	bright, pickled and passivated
Weight	3.039 kg / 1000 pieces

SCREWERK	**STP410600140C**	
Metric Drawing A4	Scale 1:1	2024-10