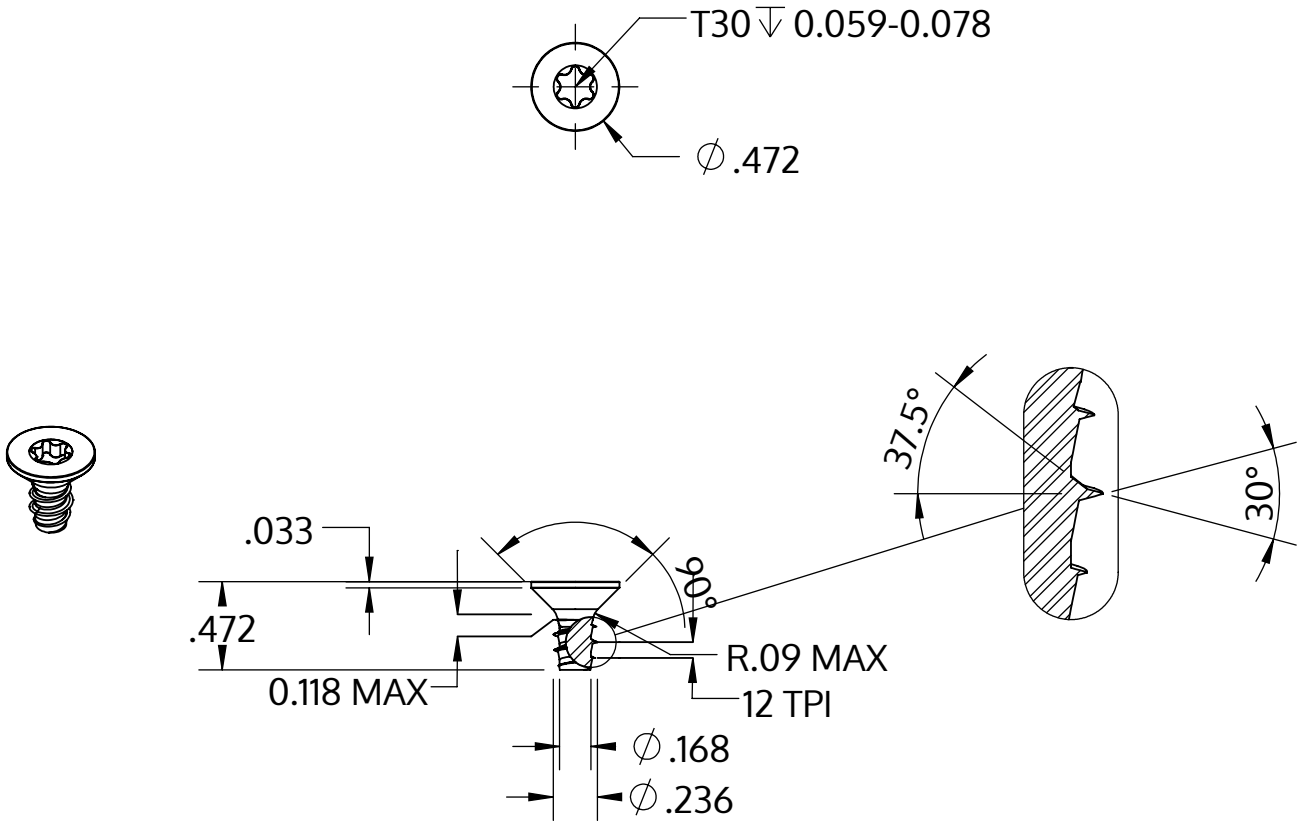

Metric size	M6 x 2.14 mm
US size (converted)	#0.236-12
	Tolerances [inch]
Length	+/- 0.021
Head diameter	+0 / -0.016
Head height	
Thread diameter	+0.005 / -0

Descripción	STP41 6.0x12.0 - T30
Material	Acero Inoxidable A2
Superficie	negro
Peso	2.767 kg / 1000 Piezas

SCREWERK	**STP410600120J**	
_Zoll Zeichnung Größe A	Escalada None:1	2024-04