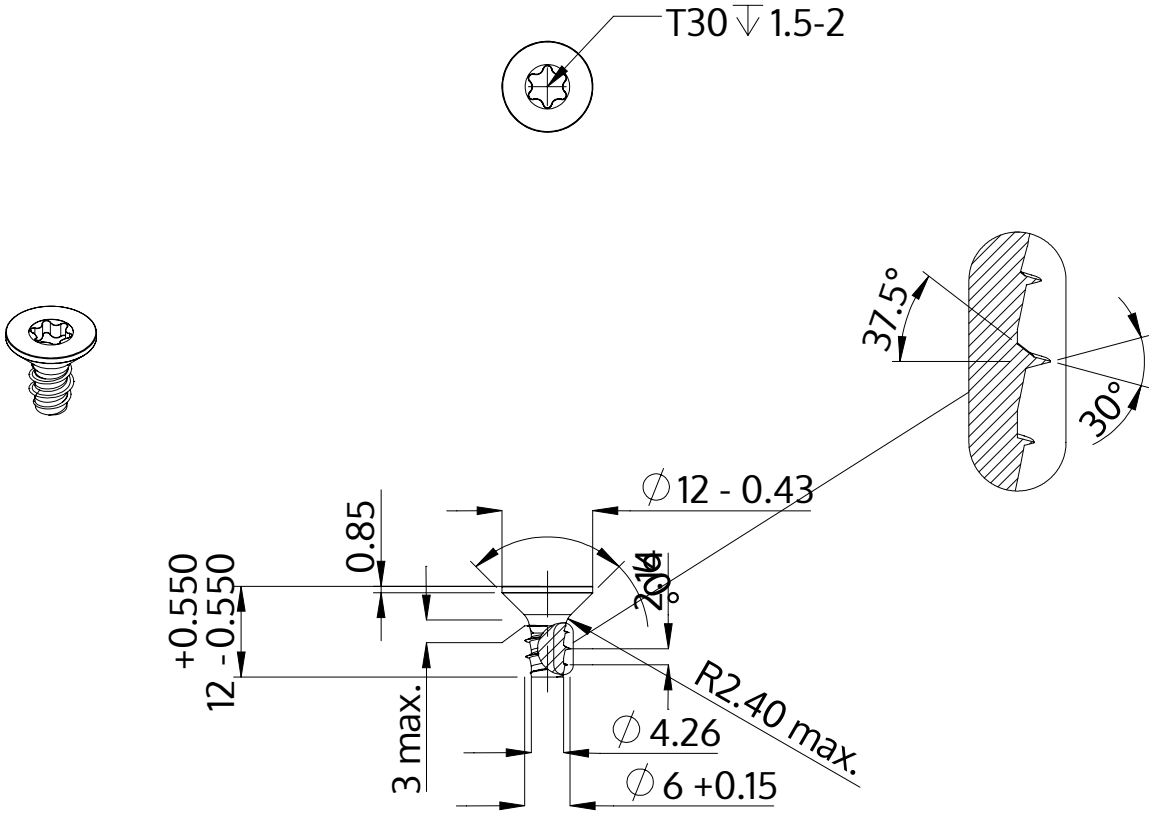

Description	STP41 6.0x12.0 - T30
Material	stainless-steel A2
Surface	bright, pickled and passivated
Weight	2.767 kg / 1000 pieces

SCREWERK	**STP410600120E**	
Metric Drawing A4	Scale None:1	2024-04