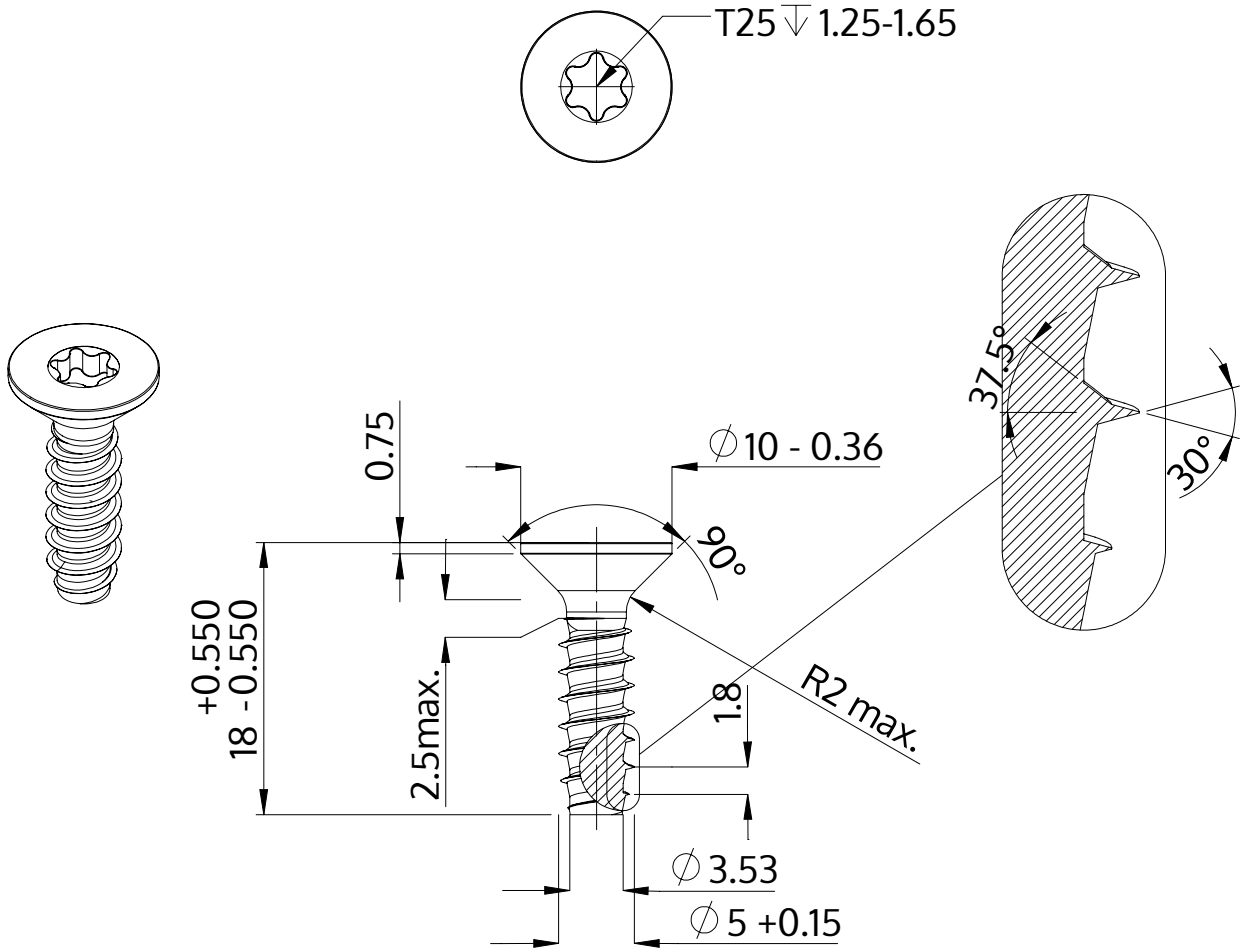

Description	STP41 5.0x18.0 - T25
Material	stainless steel A4
Surface	bright, pickled and passivated
Weight	2.418 kg / 1000 pieces

SCREWERK	**STP410500180C**	
Metric Drawing A4	Scale 2:1	2024-10