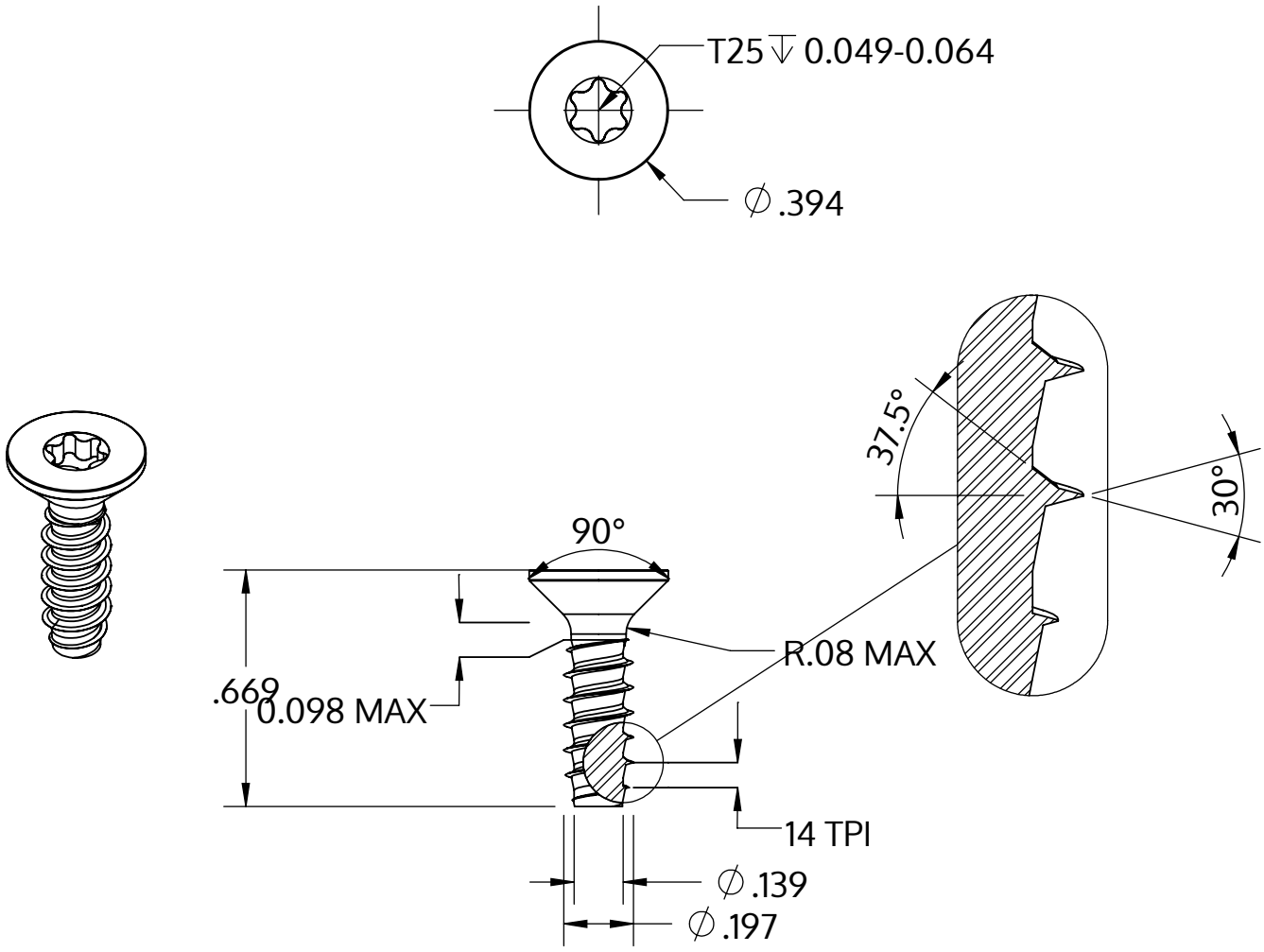

Metric size	M5 x 1.8 mm
US size (converted)	#11-14
	Tolerances [inch]
Length	+/- 0.021
Head diameter	+0 / -0.014
Head height	
Thread diameter	+0.005 / -0

Description	STP41 5.0x17.0 - T25
Material	stainless-steel A2
Surface	bright, pickled and passivated
Weight	2.323 kg / 1000 pieces

SCREWERK	**STP410500170E**	
Inch Drawing Size A	Scale 2:1	2024-10