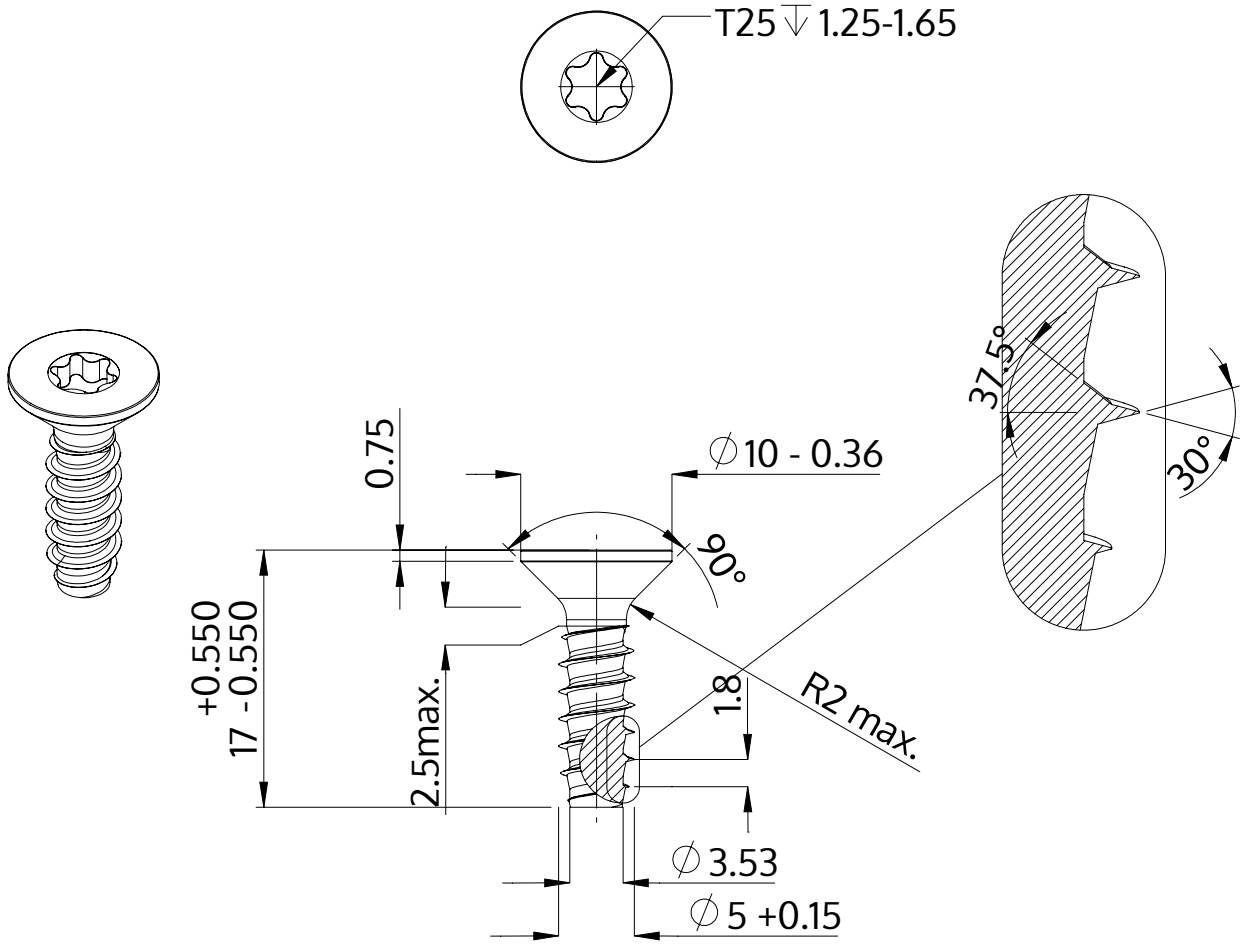

Description	STP41 5.0x17.0 - T25
Material	stainless-steel A2
Surface	bright, pickled and passivated
Weight	2.323 kg / 1000 pieces

SCREWERK	**STP410500170E**	
Metric Drawing A4	Scale 2:1	2024-10