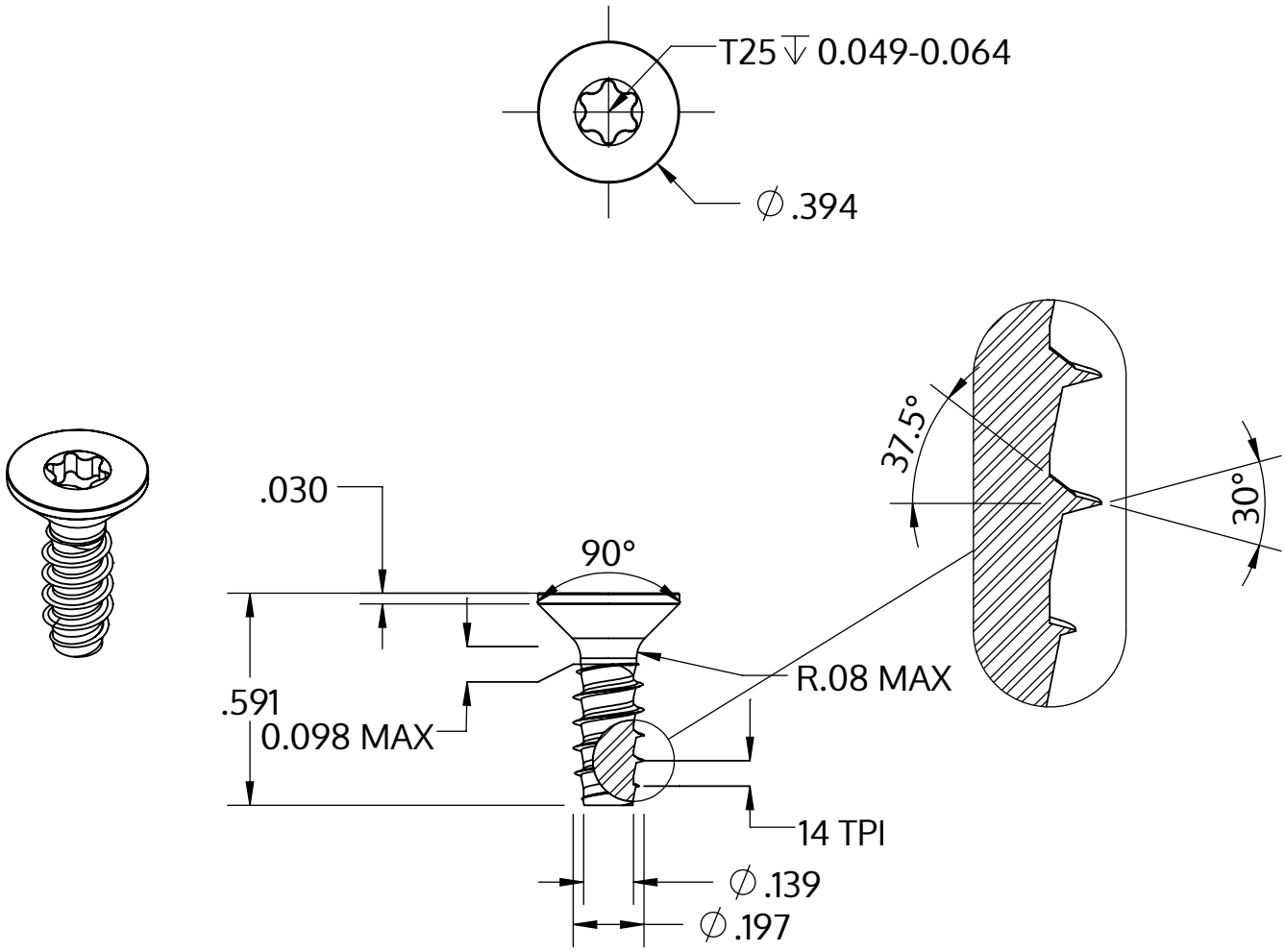


| | |
|---|---|
| Metric size | M5 x 1.8 mm |
| US size (converted) | #11-14 |
| | Tolerances [inch] |
| Length | +/- 0.021 |
| Head diameter | +0 / -0.014 |
| Head height | |
| Thread diameter | +0.005 / -0 |

| | |
|---|---|
| Beskrivning | STP41 5.0x15.0 - T25 |
| Material | rostfritt stål A2 |
| Yta | blank och passiviserad |
| Vikt | 2.134 kg / 1000 styck |

| | | |
|---|---|---|
| SCREWERK | **STP410500150E** | |
| _Zoll Zeichnung Größe A | Skala 2:1 | 2024-10 |